SIEMENS

AT Command Set

Siemens Cellular Engines

www.sendsms.cn

TC35 Module
TC37 Module
TC35 Terminal

Version: 03.10
DocID: TC3X_ATC_01_V03.10

Wireless Modules

Document Name:	**AT Command Set** **Siemens Cellular Engines**
Version:	**03.10**
Date:	**11.01.2002**
Doc Id:	**TC3X_ATC_01_V03.10**
Status:	**Released**

www.sendsms.cn

General note

With respect to any damages arising in connection with the described product or this document, Siemens shall be liable according to the General Conditions on which the delivery of the described product and this document are based.
This product is not intended for use in life support appliances, devices or systems where a malfunction of the product can reasonably be expected to result in personal injury. Siemens AG customers using or selling this product for use in such applications do so at their own risk and agree to fully indemnify Siemens for any damages resulting from illegal use or resale.
Applications incorporating the described product must be designed to be in accordance with the technical specifications provided in these guidelines. Failure to comply with any of the required procedures can result in malfunctions or serious discrepancies in results.
Furthermore, all safety instructions regarding the use of mobile technical systems, including GSM products, which also apply to cellular phones must be followed.
Handheld applications such as mobile phones or PDAs incorporating the described product must be in accordance with the guidelines for human exposure to radio frequency energy. The Specific Absorption Rate (SAR) of the application must be evaluated and approved to be compliant with national and international safety standards or directives.

Subject to change without notice at any time.

Copyright

Copying of this document and giving it to others and the use or communication of the contents thereof, are forbidden without express authority. Offenders are liable to the payment of damages. All rights reserved in the event of grant of a patent or the registration of a utility model or design.

Copyright © Siemens AG 2001

Contents

0 Version History 7

1 Introduction 8

1.1 Scope of the document 8
1.2 Supported product versions and related documents 8
1.3 Conventions 9
1.4 Supported character sets 9
1.5 AT command syntax 9
1.5.1 Using parameters 10
1.5.2 Combining AT commands on the same command line 10
1.5.3 Entering successive AT commands on separate lines 10

2 Standard V.25ter AT Commands 11

2.1 A/ Repeat previous command line 11
2.2 +++ Switch from data mode to command mode 11
2.3 AT\Qn Flowcontrol 12
2.4 ATA Answer a call 12
2.5 ATD Mobile originated call to dial a number 13
2.6 ATD><mem><n> Originate call to phone number <n> in memory <mem> 14
2.7 ATD><n> Originate call to phone number selected from active memory 16
2.8 ATD><str> Originate call to phone number in memory with corresponding field 17
2.9 ATDI Mobile originated call to dialable ISDN number <n> 18
2.10 ATDL Redial last telephone number used 19
2.11 ATE Enable command echo 20
2.12 ATH Disconnect existing connection 20
2.13 ATI Display product identification information 21
2.14 ATI[value] Display additional identification information 21
2.15 ATL Set monitor speaker loudness 22
2.16 ATM Set monitor speaker mode 22
2.17 ATO Switch from command mode to data mode 22
2.18 ATQ Set result code presentation mode 23
2.19 ATP Select pulse dialling 23
2.20 ATS0 Set number of rings before automatically answering the call 23
2.21 ATS3 Write command line termination character 24
2.22 ATS4 Set response formatting character 24
2.23 ATS5 Write command line editing character 24
2.24 ATS6 Set pause before blind dialling 25
2.25 ATS7 Set number of seconds to wait for connection completion 25
2.26 ATS8 Set number of seconds to wait for comma dial modifier 25
2.27 ATS10 Set disconnect delay after indicating the absence of data carrier 26
2.28 ATS18 Extended error report 26
2.29 ATT Select tone dialling 26
2.30 ATV Set result code format mode 27
2.31 ATX Set CONNECT result code format and call monitoring 27
2.32 ATZ Set all current parameters to user defined profile 28
2.33 AT&C Set circuit Data Carrier Detect (DCD) function mode 28
2.34 AT&D Set circuit Data Terminal Ready (DTR) function mode 29
2.35 AT&F Set all current parameters to manufacturer defaults 29
2.36 AT&S Set circuit Data Set Ready (DSR) function mode 30
2.37 AT&V Display current configuration 31
2.38 AT&W Store current configuration to user defined profile 32
2.39 AT+GCAP Request complete TA capabilities list 33
2.40 AT+GMI Request manufacturer identification 33

www.sendsms.cn

2.41 AT+GMM Request TA model identification 33
2.42 AT+GMR Request TA revision identification of software status 34
2.43 AT+GSN Request TA serial number identification(IMEI) 34
2.44 AT+ILRR Set TE-TA local rate reporting 35
2.45 AT+IPR Set fixed local rate 36
2.45.1 Autobauding 37

3 AT Commands for FAX 38

3.1 AT+FBADLIN Bad Line Treshold 38
3.2 AT+FBADMUL Error Threshold Multiplier 39
3.3 AT+FBOR Query data bit order 39
3.4 AT+FCIG Query or set the Local polling id 40
3.5 AT+FCLASS Fax: Select, read or test service class 40
3.6 AT+FCQ Copy Quality Checking 41
3.7 AT+FCR Capability to receive 41
3.8 AT+FDCC Query or set capabilities 42
3.9 AT+FDFFC Data Compression Format Conversion 43
3.10 AT+FDIS Query or set session parameters 44
3.11 AT+FDR Begin or continue phase C data reception 45
3.12 AT+FDT Data Transmission 45
3.13 AT+FET End a page or document 46
3.14 AT+FK Kill operation, orderly FAX abort 46
3.15 AT+FLID Query or set the Local Id setting capabilities 46
3.16 AT+FMDL identify Product Model 47
3.17 AT+FMFR Request Manufacturer Identification 47
3.18 AT+FOPT Set bit order independently 47
3.19 AT+FPHCTO DTE Phase C Response Timeout 48
3.20 AT+FREV Identify Product Revision 48
3.21 AT+FRH Receive Data Using HDLC Framing 48
3.22 AT+FRM Receive Data 49
3.23 AT+FRS Receive Silence 49
3.24 AT+FTH Transmit Data Using HDLC Framing 49
3.25 AT+FTM Transmit Data 50
3.26 AT+FTS Stop Transmission and Wait 50
3.27 AT+FVRFC Vertical resolution format conversion 51

4 AT Commands originating from GSM 07.07 52

4.1 AT+CACM Accumulated call meter (ACM) reset or query 52
4.2 AT+CALA Set alarm time 53
4.3 AT+CAMM Accumulated call meter maximum (ACMmax) set or query 56
4.4 AT+CAOC Advice of Charge information 57
4.5 AT+CBST Select bearer service type 58
4.6 AT+CCFC Call forwarding number and conditions control 59
4.6.1 Examples: Call forwarding 60
4.7 AT+CCLK Real Time Clock 61
4.8 AT+CEER Extended error report 62
4.9 AT+CFUN Set phone functionality 63
4.10 AT+CGMI Request manufacturer identification 65
4.11 AT+CGMM Request model identification 65
4.12 AT+CGMR Request revision identification of software status 65
4.13 AT+CGSN Request product serial number identification (IMEI) identical to GSN 66
4.14 AT+CHLD Call hold and multiparty 66
4.15 AT+CHUP Hang up call 67
4.16 AT+CIMI Request international mobile subscriber identity 67
4.17 AT+CLCC List current calls of ME 68
4.18 AT+CLCK Facility lock 69
4.18.1 Examples: Enabling / disabling PIN 1 authentication 71
4.18.2 Examples: Phone lock 71

www.sendsms.cn

4.18.3 Examples: Call barring ... 73
4.19 AT+CLIP Calling line identification presentation ... 75
4.20 AT+CLIR Calling line identification restriction (by *# sequence) ... 76
4.21 AT+CLVL Loudspeaker volume level ... 77
4.22 AT+CMEE Report mobile equipment error ... 78
4.23 AT+CMUT Mute control ... 79
4.24 AT+CMUX Enter multiplex mode ... 80
4.24.1 Restricted use of AT commands in Multiplex mode ... 81
4.25 AT+COPN Read operator names ... 83
4.26 AT+COPS Operator selection ... 84
4.27 AT+CPAS Mobile equipment activity status ... 86
4.28 AT+CPBR Read current phonebook entries ... 87
4.29 AT+CPBS Select phonebook memory storage ... 88
4.30 AT+CPBW Write phonebook entry ... 89
4.31 AT+CPIN Enter PIN ... 90
4.31.1 What to do if PIN or password authentication fails? ... 93
4.32 AT+CPIN2 Enter PIN2 ... 95
4.33 AT+CPUC Price per unit and currency table ... 97
4.34 AT+CPWD Change password ... 98
4.35 AT+CR Service reporting control ... 100
4.36 AT+CRC Set Cellular Result Codes for incoming call indication ... 101
4.37 AT+CREG Network registration ... 102
4.38 AT+CRLP Select radio link protocol param. for orig. non-transparent data call ... 104
4.39 AT+CRSM Restricted SIM access ... 105
4.40 AT+CSCS Set TE character set ... 106
4.41 AT+CSNS Single Numbering Scheme ... 107
4.42 AT+CSQ Signal quality ... 108
4.43 AT+CSSN Supplementary service notifications ... 109
4.44 AT+CUSD Unstructured supplementary service data ... 110
4.45 AT+VTD=<n> Tone duration ... 111
4.46 AT+VTS DTMF and tone generation (<Tone> in {0-9, *, #, A, B, C, D}) ... 112
4.47 AT+WS46 Select wireless network ... 113

5 AT commands originating from GSM 07.05 for SMS ... 114

5.1 AT+CMGC Send an SMS command ... 114
5.2 AT+CMGD Delete SMS message ... 115
5.3 AT+CMGF Select SMS message format ... 115
5.4 AT+CMGL List SMS messages from preferred store ... 116
5.5 AT+CMGR Read SMS message ... 119
5.6 AT+CMGS Send SMS message ... 122
5.7 AT+CMGW Write SMS message to memory ... 124
5.8 AT+CMSS Send SMS message from storage ... 126
5.9 AT+CNMA New SMS message acknowledge to ME/TE, only phase 2+ ... 127
5.10 AT+CNMI New SMS message indications ... 128
5.11 AT+CPMS Preferred SMS message storage ... 130
5.12 AT+CSCA SMS service centre address ... 131
5.13 AT+CSCB Select cell broadcast messages ... 132
5.14 AT+CSDH Show SMS text mode parameters ... 133
5.15 AT+CSMP Set SMS text mode parameters ... 134
5.16 AT+CSMS Select Message Service ... 135

6 Siemens defined AT commands for enhanced functions ... 136

6.1 AT+CXXCID Display card ID (identical to AT^SCID) ... 136
6.2 AT^MONI Monitor idle mode and dedicated mode ... 137
6.3 AT^MONP Monitor neighbour cells ... 139
6.4 AT^SACM Advice of charge and query of ACM and ACMmax ... 140
6.5 AT^SBC Battery charging / discharging and charge control ... 141
6.6 AT^SCID Display SIM card identification number ... 144

www.sendsms.cn

6.7 AT^SCKS Set SIM connection presentation mode and query SIM connection status 145
6.8 AT^SCNI List Call Number Information 146
6.9 AT^SCTM Set critical operating temperature presentation mode or query temperature 147
6.10 AT^SDLD Delete the “last number redial“ memory 149
6.11 AT^SHOM Display Homezone 149
6.12 AT^SLCD Display Last Call Duration 149
6.13 AT^SLCK Facility lock 150
6.14 AT^SMGL List SMS messages from preferred storage 151
6.15 AT^SMGO Set or query SMS overflow presentation mode or query SMS overflow 152
6.16 AT^SMGR Read SMS message without set to REC READ 153
6.17 AT^SMSO Switch off mobile station 153
6.18 AT^SM20 Set M20 Compatibility 154
6.19 AT^SNFD Set audio parameters to manufacturer default values 155
6.20 AT^SNFI Set microphone path parameters 155
6.21 AT^SNFM Mute microphone 156
6.22 Audio programming model 156
6.23 AT^SNFO Set audio output (= loudspeaker path) parameter 157
6.24 AT^SNFS Select audio hardware set 158
6.25 AT^SNFV Set loudspeaker volume 159
6.26 AT^SNFW Write audio setting in non-volatile store 159
6.27 AT^SPBC Search the first entry in the sorted telephone book 160
6.28 AT^SPBG Read entry from active telephone book via sorted index 161
6.29 AT^SPBS Steps the selected phonebook alphabetically 162
6.30 AT^SPIC Display PIN counter 163
6.31 AT^SPLM Read the PLMN list 164
6.32 AT^SPLR Read entry from the preferred operators list 165
6.33 AT^SPLW Write an entry to the preferred operators list 166
6.34 AT^SPWD Change password for a lock 167
6.35 AT^SSYNC Configure SYNC Pin 169
6.36 AT^STCD Display Total Call Duration 170

7 APPENDIX 171

7.1 Summary of ERRORS and Messages 171
7.1.1 Summary of CME ERRORS related to GSM 07.07 171
7.1.2 Summary of CMS ERRORS related to GSM 07.05 173
7.1.3 Summary of Unsolicited Result Codes (URC) 175
7.1.4 Result codes 177
7.1.5 Cause Location ID for the extended error report (AT+CEER) 177
7.1.6 GSM release cause for L3 Radio Resource (RR) (AT+CEER) 178
7.1.7 SIEMENS release cause for L3 Radio Resource (RR) (AT+CEER) 178
7.1.8 GSM release cause for L3 Mobility Management (MM) (AT+CEER) 179
7.1.9 SIEMENS release cause for L3 Mobility Management (MM) (AT+CEER) 179
7.1.10 GSM release cause for L3 Call Control (CC) (AT+CEER) 180
7.1.11 SIEMENS release cause for L3 Call Control (CC) and Mobile Station Manager (MSM) (AT+CEER) 181
7.1.12 SIEMENS release cause for L3 Advice of Charge (AOC) (AT+CEER) 182
7.1.13 GSM Release cause for Supplementary Service call (AT+CEER) 182
7.1.14 SIEMENS release cause for Call-related Supplementary Services (CRSS) (AT+CEER) 183
7.2 Summary of PIN requiring AT Commands 184
7.3 AT commands available before entering the SIM PIN 186
7.4 Standard GSM service codes 188
7.4.1 Additional notes on ^SCCFC, ^SCCWA, ^SCLCK 190
7.5 Alphabet tables 191

www.sendsms.cn

0 Version History

This chapter reports modifications and improvements over previous versions of the document.
"AT Command Set" Version **TC3x-ATC-01-V03.00=> TC3x5-ATC-01-03.10**

Chapter	Page	AT command	What is new
1.5.2	10	Any command AT+IPR	Maximum length of command line buffer added. To be used standalone.
2.13	21	ATI[value]	Only value 9 supported
2.36	30	AT&S	<value>2 removed
2.20	23	ATS0	Notes added
2.25	25	ATS7	Notes added
2.45	36	AT+IPR	Recommendation added: To be used standalone.
2.45.1	37	AT+IPR	List of bit rates detectable in autobaud mode
3	38	Fax commands	Note added: Autobauding recommended when using standard PC Fax programs
4.2	53	AT+CALA	Alarm mode not applicable to TC35 Terminal. RTC initialization after wake-up into Alarm mode described.
4.5	58	AT+CBST	Transmission rate 14400 bps now supported.
4.6	59	AT+CCFC	Description revised, examples added
4.7	61	AT+CCLK	RTC initialization after wake-up into Alarm mode described
4.9	63	AT+CFUN	Chapter revised
4.15	67	AT+CHUP	Note added: AT+CHUP implemented like ATH
4.18	69	AT+CLCK	Description revised, examples for phone security lock types and call barring added
4.22	78	AT+CMEE	Setting not saved when ME is powered down
4.24	80	AT-CMUX	Overview on Multiplex mode updated
4.24.1	81	AT+CMUX	Restrictions on Multiplex mode updated
4.26	84	AT+COPS	Chapter revised
4.28	87	AT+CPBR	Description revised, examples added
4.31 / 4.31.1	90 / 93	AT+CPIN	Description revised. Summary of actions to be taken after authentication failure
4.32	95	AT+CPIN2	Description revised, examples added
4.34	98	AT+CPWD	Description revised, examples added
4.37	102	AT+CREG	Description revised, examples added
5.15	134	AT+CSMP	Command syntax corrected, first parameter mandatory
6.5	141	AT^SBC	Default setting of <current> described Automatic shutdown explained in more detail
6.7	145	AT^SCKS	URC not stored when ME is powered down
6.18	154	AT^M20	Description revised
7.1.5- 7.1.14	171 - 183	Several AT+CEER location Ids and release causes added	
7.1.3	175	URCs	Further explanations relating to URCs
7.2 / 7.3	184/186	Usability of AT commands with or without PIN authentication: Both lists updated	

www.sendsms.cn

1 Introduction

1.1 Scope of the document

This document presents the AT Command Set for the Siemens cellular engines
TC35 Module
TC37 Module
TC35 Terminal

The AT commands detailed in this document are generally supported by all products. Where differences occur, they are noted in the chapter that refers to the command. In the present version, the only exceptions concern the following commands:

Table 1: Product specific use of AT commands

AT command	TC35 / TC37 Modules	TC35 Terminal
AT+CALA, Chapter 4.2	Alarm mode and reminder call fully applicable	Does not support Alarm mode. Please ignore any information relating to the subject. The reminder call can be used as described.
AT^SSYNC, Chapter 6.35	SYNC pin may be assigned different functions: <mode> 0 or 1.	SYNC pin supports only <mode>=1 (LED status).
AT^SBC, Chapter 6.5	All functions fully applicable	Command not applicable.

www.sendsms.cn

1.2 Supported product versions and related documents

Please note that TC35, TC37 Modules and TC35 Terminal are using the same firmware, referred to as TC35. The present AT Command Set applies to all products based on the TC35 software version 03.10.

Related documents
/1/ TC35 / TC37 Hardware Interface Description (applies to TC35 and TC37)
/2/ TC3x Release Notes related to TC35 software version 03.10 (applies to TC35, TC37 and TC35T)
/3/ TC3x Multiplexer User's Guide (applies to TC35, TC37 and TC35T)
/4/ Application Note 16: Updating TC35 Firmware (applies to TC35, TC37 and TC35T)
/5/ TC35 Terminal Hardware Interface Description (applies to TC35T)
/6/ TC35 MC35 Terminal User's Guide (applies to TC35T and MC35T)
/7/ Application Note 02: Audio Interface (applies to TC35, TC37 and TC35T)

Prior to using TC35 /TC37 or TC35T or upgrading to a new firmware release, be sure to carefully read and understand the latest product information provided in the Release Notes.

To visit the Siemens Website you can use the following link:
http://www.siemens.com/wm

1.3 Conventions

Throughout the document, the GSM engines are referred to as ME (Mobile Equipment), MS (Mobile Station), TA (Terminal Adapter), DCE (Data Communication Equipment) or facsimile DCE (FAX modem, FAX board). When the Siemens product names are required to distinguish the two models, TC3x is short for the engine type and TC35T for the terminal.

To control your GSM engine you can simply send AT Commands via its serial interface. The controlling device at the other end of the serial line is referred to as TE (Terminal Equipment), DTE (Data Terminal Equipment) or plainly ´the application´ (probably running on an embedded system).

1.4 Supported character sets

The ME uses 2 character sets: GSM 03.38 (7 bit, see character tables in Chapter 7.5, pg. 189) and UCS2 (16 Bit, refer ISO/IEC 10646). Also refer to Chapter 4.40 for information about selecting the character set.

When using an ASCII terminal to write characters differently coded in ASCII and GSM (e.g. Ä, Ö, Ü), you need to enter escape sequences. Such a character is translated into the corresponding GSM character value and when output later, the GSM character value is presented. Any ASCII terminal then will show wrong responses.

www.sendsms.cn

Table 2: Character definitions depending on alphabet (examples)

GSM 03.38 character	GSM character hex. value	Corresponding ASCII character	ASCII Esc sequence	Hex Esc sequence
Ö	5C	\	\5C	5C 35 43
"	22	“	\22	5C 32 32
ò	08	BSP	\08	5C 30 38
@	00 [1)]	NULL	\00	5C 30 30

[1)] Use of the GSM Null character may cause problems on application level when using a ´C´-function as “strlen()“ and should thus be represented by an escape sequence.

1.5 AT command syntax

The "AT" or "at" prefix must be set at the beginning of each command line. To terminate a command line enter <CR>.

Commands are usually followed by a response that includes “<CR><LF><response><CR><LF>”. Throughout this document, only the responses are presented, <CR><LF> are omitted intentionally.

Table 3: Types of AT commands and responses

Test command	AT+CXXX=?	The mobile equipment returns the list of parameters and value ranges set with the corresponding Write command or by internal processes.
Read command	AT+CXXX?	This command returns the currently set value of the parameter or parameters
Write command	AT+CXXX=<...>	This command sets user-definable parameter values.
Execution command	AT+CXXX	The execution command reads non-variable parameters affected by internal processes in the GSM engine.

1.5.1 Using parameters

- Default parameters are underlined throughout this document.
- Optional parameters are enclosed in square brackets. If optional parameters are omitted, the current settings are used until you change them.
- Optional parameters or subparamters can be omitted unless they are followed by other parameters. If you want to omit a parameter in the middle of a string it must be replaced by a comma. Example:
  AT+CPBW=,<number>,<type>,<text> writes a phonebook entry to the first free memory location.
  AT+CPBW=<index>,<number>,<type>,<text> writes a phonebook entry to the memory location specified by <index>.
- When the parameter is a character string, e.g. <text> or <number>, the string must be enclosed in quotation marks, e.g. "Charlie Brown" or "+49030xxxx". Symbols within quotation marks will be recognized as strings.
- All spaces will be ignored when using strings without quotaton marks.
- It is possible to omit the leading zeros of strings which represent numbers.
- In case of using V.25ter commands without giving an optional parameter, its value is assumed to be 0.

www.sendsms.cn

1.5.2 Combining AT commands on the same command line

You may enter several AT commands on the *same* line. This eliminates the need to type the "AT" or "at" prefix before each command. Instead, it is only needed once at the beginning of the command line. Use a semicolon as command delimiter.

The command line buffer accepts a maximum of 391 characters. If this number is exceeded none of the commands will be executed and TA returns ERROR.

The table below lists the AT commands you cannot enter together with other commands on the same line. Otherwise, the responses may not be in the expected order.

Table 4: Illegal combinations of AT commands

V.25ter commands	With	FAX commands, **Prefix AT+F**
GSM 7.07 commands	With	Siemens commands, **Prefix AT^S**
GSM 7.05 commands (SMS)	---	To be used standalone
Commands starting with AT&	---	To be used standalone
AT+IPR	---	To be used standalone

Note: Generally, appending the same or mixed AT commands should be avoided. If nevertheless you need to do enter several commands on the same line, note that the number of subsequent commands is limited.

1.5.3 Entering successive AT commands on separate lines

When you enter a series of AT commands on *separate* lines, leave a pause between the preceding and the following command until OK appears. This avoids sending too many AT commands at a time without waiting for a response for each.

2 Standard V.25ter AT Commands

These AT Commands are related to ITU-T (International Telecommunication Union, Telecommunication sector) V.25ter document.

TC35, TC37 and TC35T support the registers S0-S29. You can change S0,S3,S4,S5,S6,S7,S8,S10,S18 by using the appropriate ATSn commands. All the other registers are read-only and for internal usage only!

2.1 A/ Repeat previous command line

Execute command	Response
A/	Repeats previous command line. Line does not need to end with terminating character. Parameter
Reference V.25ter	Note • After beginning with the character “a“ or „A“, a second character “t“ ,”T“ or “/“ has to follow. In case of using a wrong second character, it is necessary to start again with character “a“ or “A“. • If autobauding is active (see **+IPR**, pg. 35) A/ (and a/) cannot be used.

www.sendsms.cn

2.2 +++ Switch from data mode to command mode

Execute command	Response
+++	This command is only available during data calls. The +++ character sequence causes the TA to cancel the data flow over the AT interface and switch to command mode. This allows you to enter AT commands while maintaining the data connection to the remote device. **OK** To prevent the +++ escape sequence from being misinterpreted as data, it must be preceded and followed by a pause of at least 1000 ms. The +++ characters must be entered in quick succession, all within 1000 ms.
Reference V.25ter	Note: • To return from on-line command mode to on-line data mode: Enter ATO as described in Chapter 2.17.

2.3 AT\Qn Flowcontrol

Execute command AT\Q<n>	Response **OK** Parameter **<n>** 0 AT\Q0 disables flow control 1 AT\Q1 XON/XOFF software flow control 2 AT\Q2 only CTS by DCE 3 AT\Q3 RTS/CTS
Reference	Note Line state refers to RS-232 levels.

2.4 ATA Answer a call

Execute command ATA	TA causes remote station to go off-hook (e.g. answer call). Note1: Any additional commands on the same command line are ignored. Note2: This command may be aborted generally by receiving a character during execution. It can´t be aborted in some connection setup states, such as handshaking. Response Response in case of data call, if successfully connected: **CONNECT<text>** TA switches to data mode. Note: **<text>** output only if +ATX parameter setting with value > 0. Response in case of voice call, if successfully connected: **OK** When TA returns to command mode after call release: **OK** Response if no connection: **NO CARRIER** Parameter
Reference V.25ter	Note See also AT+ATX and chapter 7.1.4 for **<text>**

www.seridsms.cn

2.5 ATD Mobile originated call to dial a number

Execute command ATD[<n>] [<mgsm>[;]	This command can be used to set up outgoing *voice, data or fax calls*. It also serves to control *supplementary services*. Note: The command may be aborted generally when receiving an ATH command during execution. It can´t be aborted in some connection setup states, such as hand-shaking. Different behaviour between voice and data call. Behaviour depends on parameter setting of AT^SM20. Voice call setup terminates immediately with OK. Data call setup terminates when call has been established. Response If no dialtone (parameter setting ATX2 or ATX4): **NO DIALTONE** If busy (parameter setting ATX3 or ATX4): **BUSY** If a connection cannot be set up: **NO CARRIER** If successfully connected and non-voice call: **CONNECT**<**text**> TA switches to data state. Note: <**text**> output only if +ATX parameter setting with value > 0. When TA returns to command mode after call release: **OK** If successfully connected and voice call: **OK** Parameter <**n**> String of dialling digits and optionally V.25ter modifiers (dialling digits): 0-9, * , #, +, A, B, C V.25ter modifiers: these are ignored: ,(comma), T, P, !, W, @ Emergency call: <**n**> = 112 worldwide number (no SIM needed) <**mgsm**> String of GSM modifiers: I Activates CLIR (disables presentation of own phone number to called party) i Deactivates CLIR (enables presentation of own phone number to called party) <**;**> Only required to set up voice calls. TA remains in command mode.
Reference V.25ter/GSM 07.07	Note • Parameter “I“ and “i“ only if no *#-code is within the dial string. • <**mgsm**> is not supported for data calls. • <**n**> is default for last number that can be dialled by ATDL. • See also +ATX and chapter 7.1.4 for <text>. • The *# codes can only be used with voice calls (i.e. use ´; ´) only. • If ATD is used with a USSD command (e.g. ATD*100#;) an AT+CUSD=1 is executed implicitly. (see AT+CUSD, pg. 110).

www.seedsms.cn

2.6 ATD><mem><n> Originate call to phone number <n> in memory <mem>

This command allows you to dial a phone number from a specific phonebook. To initiate a call, enter a two letter abbreviation for the phonebook <**mem**>, followed by the memory location <**n**> of the desired entry. The location range of each phonebook can be queried by AT+CPBR (see Chapter 4.28).

Execute command ATD><mem><n>[<mgsm>][;]	TA attempts to set up an outgoing call to the specified number. Note: This command may be aborted generally by receiving a character during execution. Abortion is not possible during some states of connection setup such as handshaking. Response If error is related to ME functionality: **+CME ERROR: <err>** If no dialtone (parameter setting ATX2 or ATX4): **NO DIALTONE** If busy (parameter setting ATX3 or ATX4): **BUSY** If connection cannot be set up: **NO CARRIER** If successfully connected and non-voice call: **CONNECT**<**text**> TA switches to data state. Note: <**text**> output only if +ATX parameter setting with value > 0. When TA returns to command mode after call release: **OK** If successfully connected and voice call: **OK**
	Parameter <**mem**> phonebook: "SM" SIM phonebook (storage depending on SIM card) "FD" SIM fixdialling phonebook (pos. 1-7) "LD" SIM last-dialling-phonebook (usually the last 10 numbers dialed are stored on the SIM card, no matter whether or not the calls were successfully set up) "MC" ME missed (unanswered received) calls list (up to 10 numbers) "RC" SIM received calls list "ME" ME Phonebook (up to 50 numbers) "ON" SIM (or ME) own numbers (MSISDNs) list Note: <**mem**> must be included in quotation marks (""), if parameter <**mgsm**> is used. If not, quotation marks are optional. <**n**> Integer type memory location in the range of locations available in the selected memory, i.e. the index number returned by AT+CPBR. <**mgsm**> I Activates CLIR (disables presentation of own phone number to called party) i Deactivates CLIR (enables presentation of own phone number

www.sendsms.cn

	to called party) <;> Only required to set up voice calls. TA remains in command mode.
Reference V.25ter/GSM 07.07	Note • There is no <**mem**> for emergency call (“EN”). • Command is not supported for data call! • Parameter <**mgsm**> only if no *# code is within the dial string. • The *# codes can only be used with voice calls (i.e.if “;” is appended). • See also ATX and chapter 7.1.4 for <**text**>.

Example	To query the location number of the phonebook entry:
	`AT+CPBR=1,xx`
	TA returns the entries available in the active phonebook.
	
	To dial a number from the SIM phonebook, for example the number stored to location 15:
	`ATD>SM15;`
	`OK`
	
	To dial a phone number stored in the last dial memory on the SIM card:
	`ATD>LD9;`
	`OK`

www.sendsms.cn

2.7 ATD><n> Originate call to phone number selected from active memory

This command can be used to dial a phone number selected from the active memory. The active memory is the phonebook selected with AT+CPBS (see Chapter 4.29). To set up a call simply enter the memory location of the desired entry. The memory location range of each phonebook can be queried by AT+CPBR (see Chapter 4.28).

Execute command ATD><n>[<mgsm>][;]	TA attempts to set up an outgoing call to the stored number. Note: This command may be aborted generally by receiving a character during execution. It can´t be aborted in some connection setup states, such as handshaking. Response If error is related to ME functionality: **+CME ERROR: <err>** If no dialtone (parameter setting ATX2 or ATX4): **NO DIALTONE** If busy (parameter setting ATX3 or ATX4): **BUSY** If a connection cannot be set up: **NO CARRIER** If successfully connected and non-voice call: **CONNECT<text>** TA switches to data state. Note: **<text>** output only if +ATX parameter setting with value > 0. When TA returns to command mode after call release: **OK** If successfully connected and voice call: **OK** Parameter **<n>** integer type memory location should be in the range of locations available in the memory used, i.e. the index number returned by AT+CPBR. **<mgsm>** I Activates CLIR (disables presentation of own phone number to called party) i Deactivates CLIR (enables presentation of own phone number to called party) <;> Only required to set up voice calls. TA remains in command mode.
Reference V.25ter/GSM 07.07	Note • Parameter **<mgsm>** only if no *# code is within the dial string. • Command is not supported for data call! • The *# codes can only be used with voice calls (i.e.if ";" is appended). • See also +ATX and chapter 7.1.4 for <text>.

www.sendsms.cn

2.8 ATD><str> Originate call to phone number in memory with corresponding field

This command searches the active phonebook for a given string <**str**> and dials the assigned phone number. The active phonebook is the one set with AT+CPBS.

Execute command ATD><str>[mgsm][;]	TA attempts to set up an outgoing call to stored number Note: This command may be aborted generally by receiving a character during execution. It can´t be aborted in some connection setup states, such as handshaking. Response If error is related to ME functionality: **+CME ERROR: <err>** If no dialtone (parameter setting ATX2 or ATX4): **NO DIALTONE** If busy (parameter setting ATX3 or ATX4): **BUSY** If a connection cannot be set up: **NO CARRIER** If successfully connected and non-voice call: **CONNECT<text>** TA switches to data state. Note: <**text**> output only if +ATX parameter setting with value > 0. When TA returns to command mode after call release: **OK** If successfully connected and voice call: **OK** Parameter <**str**> string type value (“x”), which should equal an alphanumeric field in at least one phonebook entry in the searched memories; used character set should be the one selected with Select TE Character Set +CSCS. <**str**> can contain escape sequences as described in chapter „Supported character sets“, pg. 9. <**str**> must be wrapped in quotation marks (""), if escape sequences or parameter <**mgsm**> are used or if the alphanumeric strings contains a blank. If not, quotation marks are optional. <**mgsm**> I Activates CLIR (disables presentation of own phone number to called party) i Deactivates CLIR (enables presentation of own phone number to called party) <**;**> Only required to set up voice calls. TA remains in command mode.
Reference V.25ter/GSM 07.07	Note Command is not supported for data calls! See also ATX and Chapter 7.1.4 for <text>

www.sandsms.cn

2.9 ATDI Mobile originated call to dialable ISDN number <n>

Execute command ATDI<n>[;]	TA attempts to set up an outgoing call to ISDN number. Note: This command may be aborted generally by receiving a character during execution. This command cannot be aborted in some connection setup states, such as handshaking. Response If no dialtone (parameter setting ATX2 or ATX4): **NO DIALTONE** If busy (parameter setting ATX3 or ATX4): **BUSY** If a connection cannot be set up: **NO CARRIER** If successful connected and non-voice call: **CONNECT**<**text**> TA switches to data state. Note: <**text**> output only if +ATX parameter setting with value > 0. When TA returns to command mode after call release: **OK** If successfully connected and voice call: **OK**
	Parameter <n> [+]<d> phone number string with maximum length of 20 characters + international dialling format <d> ISDN number string of digits: +,0-9, A, B, C <;> voice call
Reference V.25ter	

www.siemens.cn

2.10 ATDL Redial last telephone number used

Execute command ATDL[;]	This command redials the last voice and data call number used in the ATD command. • To redial the last data call number simply enter ATD • To redial the last voice call number type ATD; Note: The command may be aborted generally by receiving a character during execution. This command cannot be aborted in some connection setup states, such as handshaking. Response If there is no last number or number is not valid: **+CME ERROR** If no dialtone (parameter setting ATX2 or ATX4): **NO DIALTONE** If busy (parameter setting ATX3 or ATX4): **BUSY** If a connection cannot be set up: **NO CARRIER** If successfully connected and non-voice call: **CONNECT**<**text**> TA switches to data state. Note: <**text**> output only if +ATX parameter setting with value > 0. When TA returns to command mode after call release: **OK** If successfully connected and voice call: **OK** Parameter <;> voice call
Reference V.25ter	Note In case of voice calls ";" is necessary.

www.sendsms.cn

2.11 ATE Enable command echo

Write command ATE[<value>]	This setting determines whether or not the TA echoes characters received from TE during command state. Response **OK** Parameter <**value**> 0 Echo mode off 1 Echo mode on
Reference V.25ter	Note In case of using the command without parameter, <value> is set to 0.

2.12 ATH Disconnect existing connection

Execute command ATH[n]	Disconnects any call in progress, such as voice calls or CSD data calls. Response **OK** Note: OK is issued after circuit 109 (DCD) is turned off (RS-232 level), if it was previously on. Parameter <**n**> 0 terminate call
Reference V.25ter	Note Using ATH in Multiplex mode (**AT+CMUX**) • **ATH** terminates every data call, even if it is issued via logical channels 2 or 3. • This behaviour is in accordance with ITU-T V.25 ter; (07/97, see „6.3.6 Hook control“: "ATH is terminating any call in progress.")

www.sendsms.cn

2.13 ATI Display product identification information

Execute command	Response
ATI	ME issues product information text **SIEMENS** **REVISION TC35 x.yy** **xx.yy** **OK** Explanation of „Revision“ parameter: Version x and variant yy of software release.
Reference V.25ter	Note

2.14 ATI[value] Display additional identification information

Execute command	Response
ATI[value]	Delivers no specific information and simply returns OK.
Reference V.25ter	Note

www.sendsms.cn

2.15 ATL Set monitor speaker loudness

Execute command	Response
ATL[val]	**OK**
Reference	Note
V.25ter	• The two commands ATL and ATM are implemented only for V.25ter compatibility reasons and have no effect. • In multiplex mode the command is supported on logical channel 1 only.

2.16 ATM Set monitor speaker mode

Execute command	Response
ATM[val]	**OK**
Reference	Note
V.25ter	• The two commands ATL and ATM are implemented only for V.25ter compatibility reasons and have no effect. • In multiplex mode the command is supported on logical channel 1 only.

www.sendsms.cn

2.17 ATO Switch from command mode to data mode

Execute command	Response
ATO[n]	ATO is the alternative command to the +++ escape sequence described in Chapter 2.2: When you have established a data call and TA is in command mode, ATO causes the TA to resume the data connection and return to data mode. If connection is not successfully resumed **NO CARRIER** or TA returns to data mode from command mode **CONNECT <text>** Note: **<text>** output only if +ATX parameter setting with value > 0. Parameter **<n>** 0 switch from command mode to data mode
Reference	Note
V.25ter	

2.18 ATQ Set result code presentation mode

Write command	Response
ATQ[<n>]	Specifies whether or not the TA transmits any result code to the TE. Information text transmitted in response is not affected by this setting. If <n>=0: **OK** If <n>=1: **(none)** Parameter <**n**> 0 DCE transmits result code 1 Result codes are suppressed and not transmitted
Reference V.25ter	Note

2.19 ATP Select pulse dialling

Execute command	Response
ATP	OK
Reference V.25ter	Note No effect for GSM

www.sendsms.cn

2.20 ATS0 Set number of rings before automatically answering the call

Read command ATS0?	Response <**n**> 0K
Write command ATS0=<n>	Specifies whether or not the TA will accept an incoming data / fax call without user intervention. <**n**> determines the number of rings to wait before the TA will automatically answer. Response **OK** Parameter <**n**> 000 disables automatic answer mode 001-255 enables automatic answering after specified number of rings
Reference V.25ter	Note • Auto-answer mode is only applicable to data or fax calls. • If <**n**> is set too high, the calling party may hang up before the call can be automatically answered. • The correlation between ATS7 and ATS0 is important. Example: Call setup may fail if ATS0=20 and ATS7=30.

2.21 ATS3 Write command line termination character

Read command ATS3?	Response <n> **OK**
Write command ATS3=<n>	This parameter setting determines the character recognized by TA to terminate an incoming command line. Response **OK**
	Parameter **<n>** 000-013-127 command line termination character
Reference V.25ter	Note

2.22 ATS4 Set response formatting character

Read command ATS4?	Response **<n> OK**
Write command ATS4=<n>	This parameter setting determines the character generated by the TA for result code and information text. Response **OK**
	Parameter **<n>** 000-010-127 response formatting character.
Reference V.25ter	Note

2.23 ATS5 Write command line editing character

Read command ATS5?	Response **<n> OK**
Write command ATS5=<n>	This parameter setting determines the character recognized by TA as a request to delete the immediately preceding character from the command line. Response **OK**
	Parameter **<n>** 000-008-127 command line editing character
Reference V.25ter	Note

www.sendsms.cn

2.24 ATS6 Set pause before blind dialling

Read command ATS6?	Response **<n> OK**
Write command ATS6=<n>	No effect for GSM Response **OK**
	Parameter **<n>** 000-255 number of seconds to wait before blind dialling.
Reference V.25ter	Note

2.25 ATS7 Set number of seconds to wait for connection completion

Read command ATS7?	Response **<n> OK**
Write command ATS7=<n>	Specifies the number of seconds the TA will wait for the completion of the call setup when answering or originating a data call. Also referred to as "no answer timeout". To put it plainly, this is the time to wait for the carrier signal. If no carrier signal is received within the specified time, the TA hangs up. Response **OK**
	Parameter **<n>0** **<n>** 000 – 060 no. of seconds to wait for connection completion.
Reference V.25ter	Note • Values greater than 60 cause no error, but **<n>** will be restored to the maximum value of 60. • If called party has specified a high value for ATS0=**<n>**, call setup may fail. • The correlation between ATS7 and ATS0 is important. Example: Call setup may fail if ATS7=30 and ATS0=20. • ATS7 is only applicable to data calls.

2.26 ATS8 Set number of seconds to wait for comma dial modifier

Read command ATS8?	Response **<n> OK**
Write command ATS8=<n>	No effect for GSM Response **OK**
Reference V.25ter	Note

www.seandsms.cn

2.27 ATS10 Set disconnect delay after indicating the absence of data carrier

Read command ATS10?	Response <n> OK
Write command ATS10=<n>	This parameter setting determines the amount of time, that the TA remains connected in absence of a data carrier. If the data carrier is detected before disconnect, the TA remains connected. Response **OK**
	Parameter **<n>** 001-002-254 number of tenths of seconds of delay
Reference V.25ter	Note

2.28 ATS18 Extended error report

Test command ATS18?	Response **<n> OK**
Execute command ATS18=<n>	TA returns an extended report of the reason for the last call release and location. **<n>** 0 – 255, odd numbers set extended error report and even numbers disable this feature. Response **+Cause: <location ID>: <reason > OK** Parameter **<location ID>** Location ID as number code (see subclause 7.1.5). **<reason>** Reason for last call release as number code (see subclause 7.1.5).
Reference Siemens	Note This command works for data calls only. For voice calls please use AT+CEER.

www.sendsms.cn

2.29 ATT Select tone dialling

Execute command ATT	Response **OK**
Reference V.25ter	Note No effect for GSM

2.30 ATV Set result code format mode

Write command	Response
ATV[<value>]	This parameter setting determines the contents of the header and trailer transmitted with result codes and information responses. When <**value**> =0 **0** When <**value**> =1 **OK** Parameter <**value**> 0 Information response: <**text**><**CR**><**LF**> Short result code format: <**numeric code**><**CR**> 1 Information response: <**CR**><**LF**><**text**><**CR**><**LF**> Long result code format: <**CR**><**LF**><**verbose code**><**CR**><**LF**>
Reference	Note
V.25ter	In case of using the command without parameter <**value**> will be set to 0. Information responses described in chapter 7 (verbose code and numeric code).

www.sendsms.cn

2.31 ATX Set CONNECT result code format and call monitoring

Write command	Response
ATX[<value>]	This parameter setting determines whether or not the TA detects the presence of dial tone and busy signal and whether or not TA transmits particular result codes. **OK** Parameter <**value**> 0 CONNECT result code only returned, dial tone and busy detection are both disabled 1 CONNECT<text> result code only returned, dial tone and busy detection are both disabled 2 CONNECT<text> result code returned, dial tone detection is enabled, busy detection is disabled 3 CONNECT<text> result code returned, dial tone detection is disabled, busy detection is enabled 4 CONNECT<text> result code returned, dial tone and busy detection are both enabled
Reference	Note
V.25ter	Related <**text**> see chapter 7.1.4.

2.32 ATZ Set all current parameters to user defined profile

Execute command ATZ[<value>]	Response TA sets all current parameters to the user profile stored with AT&W (see Chapter 2.38 on page 32). If a connection is in progress, it will be terminated. The user defined profile is stored to the non-volatile memory. Note: If invalid, the user profile will be reset to the factory default profile. Any additional commands on the same command line will be ignored. A delay of 300 ms is required before next command is sent, otherwise “OK” response may be corrupted. **OK** Parameter **<value>** 0 Reset to user profile
Reference V.25ter	Note The GSM engines referred to in this manual can be assigned two profiles: the factory profile (restored with AT&F) and the user profile (stored with AT&W). See Chapter 2.35 for details on AT&F.

www.sendsms.cn

2.33 AT&C Set circuit Data Carrier Detect (DCD) function mode

Write command AT&C[<value>]	Response This parameter determines how the state of circuit 109(DCD) relates to the detection of received line signal from the distant end. **OK** Parameter **<value>** 0 DCD line is always ON. 1 DCD line is ON in the presence of data carrier only.
Reference V.25ter	Note Line state refers to RS-232 levels.

2.34 AT&D Set circuit Data Terminal Ready (DTR) function mode

Write command AT&D[<value>]	Response This command is only intended for data calls. The <value> parameter determines how the TA responds when circuit 108/2 (DTR) is changed from ON to OFF during data mode. **OK** Parameter **<value>** 0 TA ignores status on DTR. 1 ON->OFF on DTR: Change to command mode while retaining the connected call. 2 ON->OFF on DTR: Disconnect call, change to command mode. During state DTR = OFF is auto-answer off.
Reference V.25ter	Note Line state refers to RS-232 levels.

www.sendsms.cn

2.35 AT&F Set all current parameters to manufacturer defaults

Execute command AT&F[value]	Response TA sets all current parameters to the manufacturer defined profile. **OK** Parameter <**value**> 0 set all TA parameters to manufacturer default
Reference V.25ter	Note • List of parameters reset to manufacturer default (sorted by the associated AT commands): E, Q, V, X, +CBST, +CRLP, +CRC, +CR, +CNMI, +CMEE, +CSMS, ^SCKS, ^SACM, +CREG, +CLIP, the S Parameters, &D, &C, &S • In addition to the default profile, you can store an individual one with AT&W. To alternate between the two profiles enter either ATZ (loads user profile) or AT&F (restores factory profile). Refer to Chapter 2.38 for AT&W and Chapter 2.32 for ATZ.

2.36 AT&S Set circuit Data Set Ready (DSR) function mode

Write command AT&S<value>	Response This parameter determines how the TA sets circuit 107 (DSR) depending on the communication state of the TA interfacing TE. **OK**
	Parameter **<value>** 0 DSR always on. 1 TA in command mode: DSR is OFF. TA in data mode: DSR is ON.
Reference V.25ter	Note Line state refers to RS-232 levels.

www.sendsms.cn

2.37 AT&V Display current configuration

Execute command	Response	
AT&V[<n>]	TA returns the current parameter setting. The configuration varies depending on whether or not PIN authentication has been done, or Multiplex mode has been activated. Parameter <n> 0 profile number	
Configuration without Multiplex mode or configuration on channel 1 if Multiplex mode is enabled	PIN entered (see AT+CPIN, pg. 89)	PIN not entered
	ACTIVE PROFILE: **E1 Q0 V1 X4 &C1 &D2 &S0 \Q0** **S0:000 S3:013 S4:010 S5:008 S6:000 S7:060 S8:000 S10:002 S18:000** **+CBST: 7,0,1** **+CRLP: 61,61,78,6** **+CR: 0** **+FCLASS: 0** **+CRC: 0** **+CMGF: 0** **+CNMI: 0,0,0,0,1** **+ILRR: 0** **+IPR: 0** **+CMEE: 0** **^SMGO: 0,0** **+CSMS: 0,1,1,1** **^SACM: 0,"000000","000000"** **^SCKS: 0,1** **+CREG: 0,1** **+CLIP: 0,2** **+CAOC: 0** **+COPS: 0,0,"operator"** **OK**	**ACTIVE PROFILE:** **E1 Q0 V1 X4 &C1 &D2 &S0 \Q0** **S0:000 S3:013 S4:010 S5:008 S6:000 S7:060 S8:000 S10:002 S18:000** **+CBST: 7,0,1** **+CRLP: 61,61,78,6** **+CR: 0** **+FCLASS: 0** **+ILRR: 0** **+IPR: 0** **+CMEE: 0** **^SCKS: 0,1** **OK**
Logical channels 2 and 3 (Multiplex mode enabled)	**+CRC: 0** **+CMGF: 0** **+CNMI: 0,0,0,0,1** **+ILRR: 0** **+IPR: 19200** **+CMEE: 0** **^SMGO: 0,0** **+CSMS: 0,1,1,1** **^SACM: 0,"000000","000000"** **^SCKS: 0,1** **+CREG: 0, 1** **+CLIP: 0,2** **+CAOC: 0** **+COPS: 0,0,"operator"** **OK**	**+ILRR: 0** **+IPR: 19200** **+CMEE: 0** **^SCKS: 0,1** **OK**
Reference	Note: Parameter values and order are subject to change.	

www.sendsms.cn

2.38 AT&W Store current configuration to user defined profile

Execute command AT&W[<n>]	TA stores the current settings to a user defined profile in the non-volatile memory. Response **OK** or if error is related to ME functionality: **ERROR** / **+CME ERROR: <err>** Parameter **<n>** 0 number of profile
Reference V.25ter	Note The user defined profile will be loaded automatically after PowerUp. Use ATZ to restore user profile and AT&F to restore factory settings. Until the first use of AT&W, ATZ works as AT&F. See Chapter 2.32 for details on ATZ and Chapter 2.35 for AT&F. List of settings stored to user defined profile: • ATE, ATQ, ATV, ATX, AT+CRC, AT+CMGF, AT+CSDH, AT+CNMI, AT+ILRR, AT+CMEE, AT^SMGO, AT+CSMS, AT^SACM, ^SCKS, AT+CREG, AT+CLIP, AT+COPS. AT&C, AT&D, AT&S, ATS0, ATS3, ATS4, ATS5, ATS6, ATS7, ATS8, ATS10, ATS18, AT+FCLASS, AT+CBST, AT+CRLP, AT+CR. User defined profiles in multiplex mode: • On each multiplexer channel you can save an individual profile. • List of settings stored to profile on multiplexer channel 1: ATE, ATQ, ATV, ATX, AT+CRC, AT+CMGF, AT+CSDH, AT+CNMI, AT+ILRR, AT+CMEE, AT^SMGO, AT+CSMS, AT^SACM, ^SCKS, AT+CREG, AT+CLIP, AT+COPS. AT&C, AT&D, AT&S, ATS0, ATS3, ATS4, ATS5, ATS6, ATS7, ATS8, ATS10, ATS18, AT+FCLASS, AT+CBST, AT+CRLP, AT+CR. • List of settings stored to profile on multiplexer channels 2 and 3: ATE, ATQ, ATV, ATX, AT+CRC, AT+CMGF, AT+CSDH, AT+CNMI, AT+ILRR, AT+CMEE, AT^SMGO, AT+CSMS, AT^SACM, ^SCKS, AT+CREG, AT+CLIP, AT+COPS. (Parameters for data call are not relevant on channels 2 and 3.)

www.seedsms.cn

2.39 AT+GCAP Request complete TA capabilities list

Test command AT+GCAP=?	Response **OK** Parameter
Execute command AT+GCAP	Response TA reports a list of additional capabilities. **+GCAP: <name>** **OK** Parameter **<name>** e.g.: **+CGSM,+FCLASS**
Reference V.25ter	Note +CGSM: The response text shows which GSM commands of the ETSI standard are supported.

www.sendsms.cn

2.40 AT+GMI Request manufacturer identification

Test command AT+GMI=?	Response **OK**
Execute command AT+GMI	Response TA reports information to identify the manufacturer. **SIEMENS** **OK**
Reference V.25ter	Note See also ”AT+CGMI Request manufacturer identification”.

2.41 AT+GMM Request TA model identification

Test command AT+GMM=?	Response **OK**
Execute command AT+GMM	TA reports one or more lines of information text which permit the user to identify the specific model of device. **TC35** **OK**
Reference V.25ter	Note See also ”AT+CGMM Request model identification”.

2.42 AT+GMR Request TA revision identification of software status

Test command	Response
AT+GMR=?	OK
Execute command	Response
AT+GMR	TA returns product software version identification text. **REVISION x.yy** **OK** x.yy Version x and variant yy of software release.
Reference	Note
V.25ter	See also AT+CGMR Request revision identification of software status

www.sendsms.cn

2.43 AT+GSN Request TA serial number identification(IMEI)

Test command	Response
AT+GSN=?	**OK**
Execute command	Response
AT+GSN	TA reports one or more lines of information text which permit the user to identify the individual device. **<sn>** **OK**
	Parameter
	<sn> IMEI of the telephone(International Mobile station Equipment Identity)
Reference	Note
V.25ter	The serial number (IMEI) varies for every individual ME device.

2.44 AT+ILRR Set TE-TA local rate reporting

Test command AT+ILRR=?	Response **+ILRR:** (list of supported <**value**>s) **OK** Parameter See write command
Read command AT+ILRR?	Response **+ILRR:** <**value**> **OK** Parameter See write command
Write command AT+ILRR= <value>	The write command specifies whether or not an intermediate result code shall indicate the currently used local rate when an incoming or outgoing data call is established. The message is transmitted from the DCE (= TA) to the DTE (=TE) before the final result code of the connection setup (e.g. CONNECT) appears. Response **OK** Parameter <**value**> 0 Disables reporting of local port rate 1 Enables reporting of local port rate
	Intermediate result code **+ILLR:**<**rate**> Parameter <**rate**> port rate setting in bit per second 0 (Autobauding, see Chapter 2.45.1) 300 600 1200 2400 4800 9600 19200 38400 57600 115200
Reference V.25ter	Note
Example	ATD030112233445 +ILRR: 57600 CONNECT 9600/RLP

www.sendsms.cn

2.45 AT+IPR Set fixed local rate

Test command AT+IPR=?	Response **+IPR:** (list of supported auto-detectable <**rate**>**s**), (list of supported fixed-only <**rate**>**s**) **OK** Parameter See write command
Read command AT+IPR?	Response **+IPR:** <**rate**> **OK** Parameter See write command
Write command AT+IPR=<rate>	This command specifies the DTE-DCE bitrate. When you set a fix rate, make sure that both DTE (TE) and DCE (= TA) are configured to the same rate. When you select autobauding the DCE will automatically recognize the bitrate currently used by the DTE. A selected bitrate takes effect following the issue of any result code associated with this command (e.g. **OK**). The setting is stored in the non-volatile memory and will be used whenever the engine is powered up again. However, in case of autobaud mode (+IPR=0) the detected DCE bitrate will not be saved and, therefore, needs to be be re-synchronized after restarting the GSM engine (see Chapter 2.45.1). Response **OK** or if error is related to ME functionality: **ERROR** / **+CME ERROR:** <**err**> Parameter <**rate**> bit rate per second 0 (Autobauding, see Chapter 2.45.1) 300 600 1200 2400 4800 9600 19200 38400 57600 115200
Reference V.25ter	Note Your current setting of AT+IPR will be preserved • when you download new firmware (i.e. a firmware update does not restore the factory setting); • in the event of power failure. Generally, **AT+IPR=x** should be used as a standalone command. If nevertheless combinations with other commands on the same line cannot be avoided, there are several constraints to be considered: • Avoid combinations with the AT commands listed in Chapter 1.5.2. • Take into account that a delay of 100 ms is required between a response to the last command (e.g. **OK**) and the next command on the same line. • When you enter AT+IPR=0, autobauding will be activated after the response to

www.sonosms.cn

	the last command is received. • When local echo is active (ATE1) and you enter **AT+IPR=x** with other commands you may encounter the following problem: If switching to the new bit rate takes effect while a response is being transmitted, the last bytes may be sent at the new bit rate and thus, not properly transmitted. The following commands will be correctly sent at the new bit rate.

2.45.1 Autobauding

Autobauding allows the GSM engine to automatically detect the bitrate configured in the host application. The serial interface of the GSM engine supports autobauding for the following bitrates: 1200, 2400, 4800, 9600, 19200, 38400, 57600, 115200. Factory setting is autobauding enabled. This gives you the flexibility to put the GSM engine into operation no matter what bitrate your host application is configured to.

To take advantage of autobaud mode specific attention must be paid to the following requirements:

Synchronization between DTE and DCE

Ensure that DTE and DCE are correctly synchronized and the bitrate used by the DTE is detected by the DCE (= ME). To allow the bitrate to be synchronized simply issue an "AT" or "at" string. This is necessary

- after you have activated autobauding
- when you start up the GSM engine while autobauding is enabled. It is recommended to wait 3 to 5 seconds before sending the first AT character. Otherwise undefined characters might be returned.

If you want to use autobauding and autoanswer at the same time, you can easily enable the synchronization, when you activate autobauding first and then configure the autoanswer mode (ATS0=0).

www.sendsms.cn

Restrictions on autobauding operation

- The serial interface has to be operated at 8 data bits, no parity and 1 stop bit (factory setting).
- The A/ command (and a/) cannot be used.
- Only the strings „AT“ or „at“ can be detected (neither „aT“ nor „At“).
- The Unsolicited Result Codes "^SYSSTART", "^SYSSTART ALARM MODE" and "^SYSSTART CHARGE-ONLY MODE" are not indicated when you start up the ME while autobauding is enabled. This is due to the fact that the new bitrate is not detected unless DTE and DCE are correctly synchronized as described above.
- Any other Unsolicited Result Codes that may be issued before the ME detects the new bitrate (by receiving the first AT command string) will be sent at the previous bitrate.
- It is not recommended to switch to autobauding from a bitrate that cannot be detected by the autobaud mechnism (e.g. 300 baud). Responses to +IPR=0 and any commands on the same line might be corrupted.
- When entering several AT commands on the same line, consider the requirements described in the Notes of Chapter 2.45.
- See also AT+ILRR Set TE-TA local rate reporting , pg. 34

Autobauding and multiplex mode

If autobauding is active you cannot switch to multiplex mode (see +CMUX, pg. 80). Vice versa, when you run the multiplex mode, the write command **AT+IPR=<rate>** cannot be used.

3 AT Commands for FAX

The following commands can be used for FAX transmission.

If the ME is acting as a Fax-Modem to a PC-based application (e.g. „WinFax“) it is necessary to select the proper Service Class (Fax Class) provided by the ME. The ME reports its Service Class capabilities, both the current setting and the range of services avaible. This is provided by the AT+FCLASS command (see pg. 40).

Note: When sending a FAX with a standard FAX application for Personal Computers it is recommended to use Autobauding (AT+IPR=0).

Currently defind Service Class values (see TIA/EIA-592-A)			
ME	+FCLASS parameter	Service Class	Reference, Standard
👍	0	data modem	e.g. TIA/EIA-602 or ITU V.25*ter*
👍	1	Service Class 1	EIA/TIA-578-A
	1.0	Service Class 1	ITU-T T.31
👍	2	manufacture specific	this document and EIA PN-2388 (draft)
	2.0	Service Class 2	TIA/EIA-592
	2.1	Service Class 2	TIA/EIA-592-A or ITU-T T.32
	8	Voice DCE	TIA IS-101
	Reserved		

Note: Be aware that there is a difference between Service Classes 2 and 2.0! Only the first is applicable to the ME.

www.sendsms.cn

3.1 AT+FBADLIN Bad Line Treshold

Read command AT+FBADLIN?	This command defines the “Copy-Quality-OK”-threshold. If <**badline**> consecutive lines have pixel count errors in normal resolution (98 dpi) mode, then the copy quality is unacceptable. If <**badline**> * 2 consecutive lines have pixel count errors in fine resolution (196 dpi) mode, then the copy quality is unacceptable. “Copy Quality Not OK” occurs if either the error percentage is too high or too many consecutive lines contain errors. A value of 0 implies that error checking is not present or disabled. Response <**badlin**> **OK** Parameter See write command
Write command AT+FBADLIN= <badlin>	Response **OK** If error is related to ME functionality: **ERROR** Parameter <**badlin**> 0 – <u>10</u> – 255 bad lines
Reference EIA PN-2388	Note Used for Fax class 2 only

3.2 AT+FBADMUL Error Threshold Multiplier

Read command AT+FBADMUL?	This command defines the "Copy-Quality-OK" multiplier. The number of lines received with a bad pixel count is multiplied by this number. If the result exceeds the total number of lines on the page the error rate is considered too high. A threshold multiplier value of 20 corresponds to a 5% error rate. A value of 0 implies that error checking is not present or disabled. Response <**badmul**> **OK** Parameter See write command
Write command AT+FBADMUL=<n>	Response **OK** If error is related to ME functionality: **ERROR** Parameter <**n**> 0 – 20 – 255
Reference EIA PN-2388	Note Used for Faxclass 2 only

www.sendsms.cn

3.3 AT+FBOR Query data bit order

Test command AT+FBOR=?	Query the bit order for receive-mode. The mode is set by the ME dependent on the selected Service Class, see "AT+FCLASS Fax: Select, read or test service class", pg. 40. Response (list of supported bit order modes <**bor**>**s**) **OK** Parameter See write command
Read command AT+FBOR?	Response <**bor**> **OK** Parameter See write command
Write command AT+FBOR=<bor>	Response **OK** Parameter <**bor**> 0 direct bit order for both Phase C and for Phase B/D data. 1 Reversed bit order for Phase C data, direct Bit Order for Phase B/D data.
Reference EIA PN-2388	Note Used for Fax class 2 only

3.4 AT+FCIG Query or set the Local polling id

Test command AT+FCIG =?	Response (max. length of Local Polling ID string) (range of supported ASCII character values) **OK** Parameter See write command
Read command AT+FCIG?	Response **<id> OK** Parameter See write command
Write command AT+FCIG =<id>	Response **OK** Parameter **<id>** Local Polling ID string, max. length and possible content as reported by test command. Default value is empty string (“”).
Reference EIA PN-2388	Note See also “AT+FLID Query or set the Local Id setting capabilities”, pg. 46. Used for Faxclass 2 only

www.sendsms.co

3.5 AT+FCLASS Fax: Select, read or test service class

Test command AT+FCLASS=?	See introduction to fax commands, pg. 38. Response (list of supported **<n>s)** **OK** Parameter See write command
Read command AT+FCLASS?	Response **<n> OK** Parameter See write command
Write command AT+FCLASS=<n>	The ME is set to a particular mode of operation (data, fax). This causes the MA to process information in a manner suitable for that type of information. Response **OK** Parameter **<n>** 0 data (e.g. EIA/TIA-602 or ITU V.25ter) 1 Fax class 1 (EIA/TIA-578-A, Service Class 1) 2 Fax class 2 (EIA/TIA SP-2388, an early draft version of EIA/TIA-592-A – Service class 2.1)
Reference EIA/TIA-592-A	Note Using Error Correcting Mode (ECM) when sending FAXes over GSM should be avoided.

3.6 AT+FCQ Copy Quality Checking

Test command AT+FCQ =?	This command controls Copy Quality checking when receiving a fax. Response (list of supported copy quality checking <**cq**>s) **OK** Parameter See write command
Read command AT+FCQ?	Response <**cq**> **OK** Parameter See write command
Write command AT+FCQ =<cq>	Response **OK** Parameter <**cq**> 0 No copy quality checking. The ME will generate Copy Quality OK (MCF) responses to complete pages. 1 ME can check 1-D phase data. The connected application must check copy quality for 2-D phase C data
Reference EIA PN-2388	Note Used for for Faxclass 2 only.

www.sendsms.cn

3.7 AT+FCR Capability to receive

Write command AT+FCR=<cr>	Response **OK** Parameter <**cr**> 0 ME will not receive message data. This can be used when the application has insufficient storage. The ME can send and can be polled for a file. 1 ME can receive message data.
Reference EIA PN-2388	Note Used for Faxclass 2 only

3.8 AT+FDCC Query or set capabilities

Test command AT+FDCC =?	This command allows the connected application to sense and constrain the capabilities of the facsimile DCE (=ME), from the choices defined in CCITT T.30 Table 2. Response (list of <**VR**>s), (list of <**BR**>s), (list of <**WD**>s), (list of <**LN**>s), (list of <**DF**>s), (list of <**EC**>s), (list of <**BF**>s), (list of <**ST**>s) **OK** Parameter VR: Vertical Resolution, BR: Bit Rate, WD: Page Width, LN: Page Length, DF: Data Compression Format, EC: Error Correction Mode, BF: Binary File Transfer Mode, ST: Scan Time/Line. Note: For further information see AT+FDIS, pg. 44
Read command AT+FDCC?	Response <**dcc**> **OK** Parameter See write command
Write command AT+FDCC=<VR>, ,<WD>,<LN>,<DF>,<EC>,<BF>,<ST>	Response **OK** Parameter VR: Vertical Resolution, BR: Bit Rate, WD: Page Width, LN: Page Length, DF: Data Compression Format, EC: Error Correction Mode, BF: Binary File Transfer Mode, ST: Scan Time/Line. Note: For further information see AT+FDIS, pg. 44
Reference EIA PN-2388	Note Used for Faxclass 2 only

www.sendsms.cn

3.9 AT+FDFFC Data Compression Format Conversion

Test command AT+FDFFC=?	This parameter determines the ME response to a mismatch between the data format negotiated for the facsimile session, reported by the +FDCS:DF subparameter, and the Phase C data desired by the controlling application, indicated by the optional +FDT:DF subparameter, or the +FDIS=DF subparameter for the +FDR operation. Response (list of supported <**df**>s) **OK** Parameter See write command
Read command AT+FDFFC?	Response <**df**> **OK** Parameter See write command
Write command AT+FDFFC =<df>	Response **OK** Parameter <**df**> 0 Mismatch checking is always disabled. The controlling application has to check the +FDCS: DF subparameter and transfer matching data.
Reference EIA PN-2388	Note Used for Fax Class 2 only

www.sendsms.cn

3.10 AT+FDIS Query or set session parameters

Test command AT+FDIS =?	This command allows the controlling application to sense and constrain the capabilities used for the current session. It uses +FDIS to generate DIS or DTC messages directly, and uses +FDIS and received DIS messages to generate DCS messages. Response (list of <**VR**>s), (list of <**BR**>s), (list of <**WD**>s), (list of <**LN**>s), (list of <**DF**>s), (list of <**EC**>s), (list of <**BF**>s), (list of <**ST**>s) Parameter See write command
Read command AT+FDIS?	Response <**cdec**> **OK** Parameter See write command
Write command AT+FDIS = <VR>, ,<WD>, <LN>,<DF>,<EC>, <BF>,<ST>	Response **OK** Parameter

Vertical Resolution	VR	0	normal, 98 lpi
		1	fine, 196 lpi
Bit Rate	BR	0	2400 bit/s, V.27ter
		1	4800 bit/s, V.27ter
		2	7200 bit/s, V.29
		3	9600 bit/s, V.29
Page Width	WD	0 *)	1728 pixels in 215mm
		1	2048 pixels in 255 mm
		2	2432 pixels in 303 mm
		3	1216 pixels in 151 mm
		4	864 pixels in 107 mm
Page Length	LN	0	A4, 297mm
		1	B4, 364mm
		2	unlimited length
Data Compression Format	DF	0 *)	1-D modified Huffman
		1	2-D modified read
		2	2-D uncompressed mode
Error correction (Annex A/T.30)	EC	0 *)	disable ECM
		1	enable ECM, 64 bytes/frame
		2	enable ECM, 256 bytes/frame
Binary File mode Transfer Mode	BF	0 *)	disable BFT
		1	enable BFT
Scan Time/Line	ST	0 *)	0 ms (at VR= normal)
		1	5 ms
		2	10 ms
		3	10 ms
		4	20 ms
		5	20 ms
		6	40 ms
		7	40 ms

*) Note: Only the default value needs to be implemented. Use test command to check which parameter values are really possible!

Reference EIA PN-2388	Note Used for Faxclass 2 only

www.sendsms.cn

3.11 AT+FDR Begin or continue phase C data reception

Execute command AT+FDR	The +FDR command initiates transition to Phase C data reception. Response **CONNECT** or **OK** If error is related to ME functionality: ERROR
Reference EIA PN-2388	Note Used for Faxclass 2 only

3.12 AT+FDT Data Transmission

Execute command AT+FDT	This command requests the ME to transmit a Phase C page. When the ME is ready to accept Phase C data, it issues the negotiation responses and the CONNECT result code to the application. In Phase B, the +FDT command releases the ME to proceed with negotiation, and releases the DCS message to the remote station. In Phase C, the +FDT command resumes transmission after the end of a data stream transmited before. Response **CONNECT**
Write command AT+FDT =<dt>	Response **CONNECT** Parameter **<dt>** **DF,VR,BR,WD,LN** comma separated parameter list

Data Compression Format	DF	0	1-D modified Huffman
		1	2-D modified read
		2	2-D uncompressed mode
Vertical Resolution	VR	0	normal, 98 lpi
		1	fine, 196 lpi
Bit Rate	BR	0	2400 bit/s, V.27ter
		1	4800 bit/s, V.27ter
		2	7200 bit/s, V.29
		3	9600 bit/s, V.29
Page Width	WD	0	1728 pixels in 215mm
		1	2048 pixels in 255 mm
		2	2432 pixels in 303 mm
		3	1216 pixels in 151 mm
		4	864 pixels in 107 mm
Page Length	LN	0	A4, 297mm
		1	B4, 364mm
		2	unlimited length

Reference EIA PN-2388	Note Used for Faxclass 2 only

www.sendsms.cn

3.13 AT+FET End a page or document

Write command AT+FET=<ppm>	This command indicates that the current page or partial page is complete. An ERROR response code results if this command is issued while the mode is on-hook. Response **OK** Parameter <**ppm**> Post Page Message Codes 1 another document next 2 no more pages or documents 4 another page, procedure interrupt 5 another document, procedure interrupt
Reference EIA PN-2388	Note Used for Faxclass 2 only

3.14 AT+FK Kill operation, orderly FAX abort

Execute command AT+FK	This command causes the TA to terminate the session in an orderly manner. Response **OK**
Reference	Note Used for Faxclass 2 only

www.sendsms.cn

3.15 AT+FLID Query or set the Local Id setting capabilities

Test command AT+FLID =?	Response (max. character length of Local ID string) (range of supported ASCII character values) OK Parameter See write command
Read command AT+FLID?	Response < **lid** > **OK** Parameter See write command
Write command AT+FLID =<lid>	Response **OK** Parameter <**lid**> Local ID string, max. length and possible content as reported by test command. Default value is empty string (“”).
Reference EIA PN-2388	Note See also “AT+FCIG Query or set the Local polling id ”, pg. 39. Used for Faxclass 2 only

3.16 AT+FMDL identify Product Model

Read command AT+FMDL?	Send the model identification to the TA Response **Gipsy Soft Protocolstack** **OK**
Reference Siemens	Note Used for Faxclass 2 only

3.17 AT+FMFR Request Manufacturer Identification

Read command AT+FMFR?	Send the manufacturer identification to the TA Response **SIEMENS** **OK**
Reference Siemens	Note Used for Fax class 2 only

www.sendsms.cn

3.18 AT+FOPT Set bit order independently

Write command AT+FOPT=<opt>	Model specific command to set bit order independently of the understanding which is "mirrored" and which is direct. Response **OK** Parameter <**opt**> 0 non-standard 1 standard
Reference Siemens	Note Used for Fax class 2 only

3.19 AT+FPHCTO DTE Phase C Response Timeout

Read command AT+FPHCTO?	The time-out value <**tout**> determines how long the DCE will wait for a command after reaching the end of data when transmitting in Phase C. When time-out is reached, the DCE assumes that there are no more pages or documents to send. Response <**tout**> **OK** Parameter See write command
Write command AT+FPHCTO=<tout>	Parameter **<tout>** 0 – 30 – 255 time-out value in 100ms units. Response **OK** If error is related to ME functionality: **ERROR**
Reference EIA PN-2388	Note Used for Fax class 2 only

3.20 AT+FREV Identify Product Revision

Test command AT+FREV?	Sends the revision identification to the TA Response **V2.550** **OK**
Reference Siemens	Note Used for Fax class 2 only

3.21 AT+FRH Receive Data Using HDLC Framing

Execute command AT+FRH=<mod>	This command causes the TA to receive frames using the HDLC protocol and the modulation defined below. An ERROR response code results if this command is issued while the modem is on-hook. Response **CONNECT** If error is related to ME functionality: **ERROR** Parameter <**mod**> modulation mode 3 V21 Ch2 300 bps 24 V.27ter 2400 bps 48 V.27ter 4800 bps 72 V.29 7200 bps 96 V.29 9600 bps
Reference TIA/EIA-578	Note Used for Fax class 1 only

www.sendsms.cn

3.22 AT+FRM Receive Data

Test command AT+FRM=?	Response (List of supported modulation modes <**mod**>s) **OK** Parameter See write command
Write command AT+FRM=<mod>	This command causes the TA to enter the receiver-mode using the modulation defined below. An ERROR response code results if this command is issued while the modem is on-hook. Response **CONNECT** If error is related to ME functionality: **ERROR** Parameter <**mod**> 96 V.29 9600 bps 72 V.29 7200 bps 48 V.27ter 4800 bps 24 V.27ter 2400 bps
Reference TIA/EIA-578	Note Used for Faxclass 1 only

3.23 AT+FRS Receive Silence

Write command AT+FRS=<time>	+FRS=n causes the TA to report an OK result code to the TE after <**time**> 10 millisecond intervals of silence have been detected on the line. This command is aborted if any character is received by the DTE. The modem discards the aborting character and issues an OK result code. An ERROR response code results if this command is issued while the mode is on-hook. Response **OK** If error is related to ME functionality: **ERROR** Parameter <**time**> 0 – 255 no. of 10 millisecond intervals
Reference TIA/EIA-578	Note Used for Faxclass 1 only

3.24 AT+FTH Transmit Data Using HDLC Framing

Write command AT+FTH=<mod>	This command causes the TA to transmit data using HDLC protocol and the modulation mode defined below. An ERROR response code results if this command is issued while the modem is on-hook. Response **CONNECT** Parameter <**mod**> 3 V.21 Ch2 300 bps
Reference TIA/EIA-578	Note Used for Faxclass 1 only

www.sendsms.cn

3.25 AT+FTM Transmit Data

Test command AT+FTM=?	Response (List of supported modulation modes) **OK** Parameter See write command
Write command AT+FTM=<mod>	This command causes the TA to transmit data using the modulation mode defined below. An ERROR response code results if this command is issued while the modem is on-hook. Response **CONNECT** If error is related to ME functionality: **ERROR** Parameter <**mod**> modulation mode 96 V.29 9600 bps 72 V.29 7200 bps 48 V.27ter 4800 bps 24 V.27ter 2400 bps
Reference TIA/EIA-578	Note Used for Fax class 1 only

www.sendsms.cn

3.26 AT+FTS Stop Transmission and Wait

Write command AT+FTS=<time>	This command causes the TA to terminate a transmission and wait for <**time**> 10 millisecond intervals before responding with the OK result code to the DTE. Response An ERROR response code results if this command is issued while the modem is on-hook. Parameter <**time**> 0 – 85 no. of 10 millisecond intervals
Reference TIA/EIA-578	Note Used for Fax class 1 only

3.27 AT+FVRFC Vertical resolution format conversion

Test command AT+FVRFC =?	This command determines the DCE response to a mismatch between the vertical resolution negotiated for the facsimile session and the Phase C data desired by the DTE. Response (List of supported mismatch checking modes) **OK** Parameter See write command
Read command AT+FVRFC?	Response <**vrfc**> **OK** Parameter See write command
Write command AT+FVRFC =<vrfc>	Response **OK** Parameter <**vrfc**> 0 disable mismatch checking. 2 enable mismatch checking, with resolution conversion of 1-D data in the DCE, and an implied AT+FK command executed on 2-D mismatch detection
Reference EIA PN-2388	Note Used for Fax class 2 only

www.sendsms.cn

The following AT commands are dummy commands. Invoking these commands will not cause ERROR result codes, but these commands have no functionality.

AT+FAA	Auto Answer mode
AT+FECM	Error Correction Mode control
AT+FLNFC	Page Length format conversion
AT+FLPL	Indicate document available for polling
AT+FMINSP	Minimum Phase C speed
AT+FRBC	Phase C data receive byte count
AT+FREL	Phase C received EOL alignment
AT+FSPL	Enable polling
AT+FTBC	Phase C data transmit byte count
AT+FWDFC	Page width format conversion

4 AT Commands originating from GSM 07.07

These AT Commands are according to ETSI (European Telecommunications Standards Institute) GSM 07.07 document.

4.1 AT+CACM Accumulated call meter (ACM) reset or query

Test command AT+CACM=?	Response **OK** Parameter
Read command AT+CACM?	Response TA returns the current ACM value. **+CACM: <acm> OK** If error is related to ME functionality: **+CME ERROR: <err>** Parameter **<acm>** string type; three bytes of the current ACM value in hexadecimal format (e.g. “00001E” indicates decimal value 30) 000000 – FFFFFF
Write command AT+CACM= [<passwd>]	Parameter **<passwd>** string type: **SIM PIN2** Response TA resets the Advice of Charge related to the accumulated call meter (ACM) value in SIM file EF(ACM). ACM contains the total number of home units both for the current and preceding calls. **OK** If error is related to ME functionality: **+CME ERROR: <err>**
Reference GSM 07.07	

www.sendsms.cn

4.2 AT+CALA Set alarm time

Test command AT+CALA=?	Test command returns supported array index values <**n**>, alarm types <**type**>, and maximum length of the text <**tlength**> to be output. Response **+CALA:** (list of supported <**n**>s), (list of supported <**type**>s), (range of supported <**tlength**>) **OK** If error is related to ME functionality: **+CME ERROR:** <**err**> Parameter See write command
Read command AT+CALA?	Read command returns the list of current active alarm settings in the ME. Response **+CALA:** <**time**>**[,**<**n**>**[,**<**type**>**[,**<**text**>**]]]** If error is related to ME functionality: **+CME ERROR:** <**err**> Parameter See write command
Write command AT+CALA=<time>[,<n>[,<type>[,<text>]]]	The write command sets an alarm time in the ME. When the alarm is timed out and executed the ME returns an Unsolicited Result Code (URC). The alarm call can adopt two functions, depending on whether or not you switch the GSM engine off after setting the alarm: Reminder call: You can use the alarm function as a wake-up or reminder call. For this purpose, set the alarm as described below and do not switch off or power down the ME. When executed the call comes as an Unsolicited Result Code. Applies to TC35, TC37 and TC35 Terminal. Alarm mode: You can use the alarm call to restart the ME when powered down. For this purpose, set the alarm as described below. Then power down the ME by entering the AT^SMSO command (pg. 152). When the alarm time is reached, the ME will wake up to Alarm mode. To prevent the ME from unintentionally logging into the GSM network, Alarm mode provides restricted operation. Upon wake-up, the ME indicates an Unsolicited Result Code which reads: ^SYSSTART ALARM MODE". A limited number of AT commands is available during Alarm mode: AT+CCLK, AT+CALA, AT^SBC, AT^SCTM, AT^SMSO. The ME remains deregistered from the GSM network. If you want the ME to return to full operation (normal operating mode) it is necessary to drive the ignition line (IGT pin of ZIF interface) to ground. If your application is battery powered note that charging cannot be started while ME is in Alarm mode. For details please refer to the "Hardware Interface Description" supplied with your GSM engine. Applies to TC35 / TC37 modules. TC35 Terminal does not support the Alarm mode. Response **OK** If setting fails: **+CME ERROR:** <**err**> Refer Chapter 7.1.1, pg. 171, for <err> values.

www.sendsms.cn

	Parameter **<time>** string type value; format is "yy/MM/dd,hh:mm:ss", where characters indicate year (two last digits), month, day, hour, minutes. E.g. 6th of May 2001, 22:10:00 hours equals to “01/05/06,22:10:00" (see also +CCLK). Note: if **<time>** equals current date and time or is to an earlier date, TA returns **+CME ERROR: <21>.** **<n>** integer type value indicating the array index of the alarm. Index starts with 0. If only this value is returned by the test command, it is default and indicates that only one alarm time is possible; however, if a second alarm time is set, the previous alarm is deleted. **<type>** integer type value indicating the type of the alarm **0** Alarm indication: text message via serial interface **<text>** string type value indicating the text to be displayed when alarm time is reached; maximum length is **<tlength>**. After first connection to power supply **<text>** is undefined. Note: **<text>** will be stored to the non-volatile flash memory when the device enters the Power Down mode via AT^SMSO (pg. 152). Once saved, it will be available upon next power-up, until you overwrite it by typing another text. This eliminates the need to enter the full string when setting a fresh alarm and thus, saves memory due to the limited number of flash memory write cycles (e.g. 100.000). **<tlength>** integer type value indicating the maximum length of **<text>**. The maximum length is 16.
Unsolicited result code	Indicates reminder call: **+CALA: <text>** Indicates ME wake-up into Alarm mode: **^SSYSTART ALARM MODE** **+CALA: <text>** If autobauding is active (AT+IPR=0) the line ^SSYSTART ALARM MODE does not appear, but your individual **<text>** message will be displayed.
Reference GSM 07.07	Note • **<text>** should not contain characters which are coded differently in ASCII and GSM (e.g. Ä, Ö, Ü), see also Chapter 7.5. • In the event of power outage the GSM engine retains the current alarm setting, but the RTC will be reset to **<time>** = “00/01/01,00:00:00” and must be restored after resume of power (see also AT+CCLK, pg. 61. It is only in Power Down mode, that the RTC is kept powered from a dedicated voltage regulator, thus saving the current date and time. • When the GSM engine wakes up to Alarm mode, the system takes 1s to re-initialize the RTC and to update the current time. Therefore, it is recommended to wait 1s before using the AT+CCLK command (for example 1s after ^SSYSTART has been output). • Please consider when using multiplex mode (**+CMUX**, pg. 80): - It is possible to use **+CALA** with every logical channel (1 – 3). - The total no. of possible alarm events is shared by all channels. If **<n>** = 0 is returned by the test command, this indicates that only one common alarm time is possible for all logical channels.

www.cenusms.cn

	- For every channel a different <**text**> parameter can be stored. - <**text**> will be output on the same logical channel the alarm was entered. If not in multiplex mode, <**text**> will be output independent of the related channel. - The read command returns all pending alarms, independent on which logical channel an alarm was entered. It´s up to the user to identify these alarms by specific <**text**>s.

Examples	Example 1:
	You may want to configure a reminder call for May 31, 2001, at 9.30h, including the message "Good Morning".
	Write command:
	`AT+CALA="01/05/31,09:30:00",0,0,"Good Morning"`
	`OK`
	Do not switch off the GSM engine. When the alarm is executed the ME returns the following URC:
	`+CALA: Good Morning`

	Example 2:
	To set a fresh alarm using the same message as in Example 1, simply enter date and time. <**n**>, <**type**>, <**text**>, <**tlength**> can be omitted:
	`AT+CALA="01/05/31,08:50:00"`
	`OK`
	When the alarm is executed the URC comes with the same message:
	`+CALA: Good Morning`

	Example 3:
	To configure the alarm mode, e.g. for May 20, 2001, at 8.30h, enter
	`AT+CALA="01/05/20,08:30:00"`
	`OK`
	Next, power down the ME:
	`AT^SMSO`
	`^SMSO: MS OFF`
	When the alarm is executed the ME wakes up to Alarm mode and displays a URC. If available, this line is followed by the individual <**text**> most recently saved. If no individual message was saved only the first line appears.
	`^SYSSTART ALARM MODE`
	`+CALA: Good Morning`

www.senaems.cn

Table 5: Summary of AT commands available in Alarm mode

AT command	Use
AT+CALA	Set alarm time
AT+CCLK	Set date and time of RTC
AT^SBC	In Alarm mode, you can only query the present current consumption and check whether or not a charger is connected. The battery capacity is returned as 0, regardless of the actual voltage (since the values measured directly on the cell are not delivered to the module).
AT^SCTM	Query temperature of GSM engine
AT^SMSO	Power down GSM engine

4.3 AT+CAMM Accumulated call meter maximum (ACMmax) set or query

Test command AT+CAMM=?	Response OK Parameter
Read command AT+CAMM?	Response TA returns the current ACMmax value. **+CAMM: <acmmax> OK** If error is related to ME functionality: **+CME ERROR: <err>** Parameter See write command
Write command AT+CAMM= [<acmax>[,<passwd>]]	Response TA sets the Advice of Charge related to the accumulated call meter maximum value in SIM file EF (ACMmax). ACMmax contains the maximum number of home units allowed to be consumed by the subscriber. **OK** If error is related to ME functionality: **+CME ERROR: <err>** Parameter **<acmmax>** string type; three bytes of the max. ACM value in hexadecimal format (e.g. "00001E" indicates decimal value 30) 000000 disable ACMmax feature 000001-FFFFFF **<passwd>** string type SIM PIN2
Reference GSM 07.07	Note

www.sendsms.cn

4.4 AT+CAOC Advice of Charge information

Test command AT+CAOC=?	Response **+CAOC:** (list of supported <**mode**>s) **OK** Parameter See write command
Read command AT+CAOC?	Response **+CAOC:** <**mode**> **OK** Parameter See write command
Write command AT+CAOC=<mode>	Response TA sets the Advice of Charge supplementary service function mode. If error is related to ME functionality: **+CME ERROR:** <**err**> If <**mode**>=**0**, TA returns the current call meter value **OK** Parameter <**mode**> 0 query CCM value <**ccm**> string type; three bytes of the current CCM value in hexadecimal format (e.g. “00001E” indicates decimal value 30); bytes are similarly coded as ACMmax value in the SIM 000000-FFFFFF
Execute command AT+CAOC	Response TA returns the current call meter value If error is related to ME functionality: **+CME ERROR:** <**err**> If <**mode**>=**0**, TA returns the current call meter value **+CAOC:** <**ccm**> **OK** Parameter See write command
Reference GSM 07.07	Note

www.sendsms.cn

4.5 AT+CBST Select bearer service type

Test command AT+CBST=?	Response **+CBST:** (list of supported <**speed**>**s**),(list of supported <**name**>**s**),(list of supported <**ce**>**s**) **OK** Parameter See write command
Read command AT+CBST?	Response **+CBST:** <**speed**>,<**name**>,<**ce**> **OK** Parameter See write command
Write command AT+CBST=[<speed>[,<name>[,<ce>]]]	Response TA selects the bearer service <**name**>, the data rate <**speed**> and the connection element <**ce**> to be used when data calls are originated. The settings also apply to mobile terminated data calls, especially when single numbering scheme calls or calls from analog devices are received (see also Chapter 4.41). **OK** Parameter <**speed**> 0 auto bauding 4 2400 bps(V.22bis) 6 4800 bps(V.32) 7 9600 bps(V.32) 14 14400 bps (V.32) 68 2400 bps (V.110) 70 4800 bps (V.110) 71 9600 bps (V.110) 75 14400 bps (V.110) <**name**> 0 asynchronous modem <**ce**> 1 non-transparent Transparent mode is not supported.
Reference GSM 07.07	Note • GSM 02.02[1]: List of allowed combinations of subparameters. • The PLMN influences the second air interface (to the terminator), therefore another mode may be established by the network. • In multiplex mode (AT+CMUX Enter multiplex mode, pg. 80), the bearer capabilities using 14400 bps (14,75) are not available. Incoming calls are negotiated at 9600bps. If multiplex mode is active, the bearer capability automatically switches to +CBST=7,0,1.

www.sendsms.cn

4.6 AT+CCFC Call forwarding number and conditions control

Test command AT+CCFC=?	Response **+CCFC: (list/range of supported <reas>s) OK** Parameter See execute command
Write command AT+CCFC=<reas>, <mode>[,<number>[,<type>[,<class>[,<time>]]]]	Response TA controls the call forwarding supplementary service. Registration, erasure, activation, deactivation and status query are supported. If <**mode**> <>**2** and command successful **OK** If error is related to ME functionality: **+CME ERROR:** <**err**> Parameter <**reas**> 0 unconditional 1 mobile busy 2 no reply 3 not reachable 4 all call forwarding (includes reasons 0, 1, 2 and 3) 5 all conditional call forwarding (includes reasons 1, 2 and 3) <**mode**> 0 disable call forwarding 1 enable call forwarding 2 query status of call forwarding 3 register <**number**> and activate call forwarding 4 erase <**number**> and deactivate call forwarding <**number**> string type phone number of forwarding address in format specified by <**type**>. If you select <**mode**> = 3, the phone <**number**> will be registered and stored. This allows you to disable / enable CF to the same destination without the need to enter the phone number once again. Depending on the services offered by the provider the registration may be mandatory before CF can be used. The registered number remains in the storage until you register another number or erase it using <**mode**> = 4. <**type**> type of address in integer format; default 145 when dialling string includes international access code character "+", otherwise 129 <**class**> sum of integers each representing a <**class**> of information: 1 voice 2 data 4 fax 7 sum of the integers 1, 2 and 4. CF for voice, data and fax. 8 short message service <**time**> time to wait before call is forwarded, rounded to a multiple of 5 sec.. 1...20..30 (only for <reas>=no reply) <**status**> 0 not active 1 active

www.sendsms.cn

Reference	Note
GSM 07.07, GSM 02.04, GSM 02.82	• Please note that you can register, disable, enable and erase <**reas**> 4 and 5 as described above. However, it is not possible to query the status of <**reas**> 4 and 5 with AT+CCFC. Instead, you may use the the ATD command followed by *'# codes to check the status of these two reasons. See Chapter 7.4 for a complete list of *# GSM codes. • If the parameter <**class**> is omitted, the default value is used, and thus only the first three modes (voice, data and fax) are interrogated.

4.6.1 Examples: Call forwarding

Please note that when you configure or query call forwarding without specifying any classes, the settings will refer to classes 1, 2 and 4 only (=default). Class 8 (SMS) will not be included by default and must be explicitly entered. The handling of classes is equivalent to AT+CLCK (Chapter 4.18.3).

Examples

To register the destination number for unconditional call forwarding (CFU):

```
at+ccfc=0,3,"+493012345678",145
OK
```

Remember that call forwarding will be activated once you register the number.

To query status of CFU without specifying <class>:

```
at+ccfc=0,2
+CCFC: 1,1,"+493012345678",145
+CCFC: 1,2,"+493012345678",145
+CCFC: 1,4,"+493012345678",145
OK
```

To deactivate CFU without specifying <class>:

```
at+ccfc=0,0
OK
```

To check whether CFU was successfully deactivated (note that the registered destination remains in the storage when you disabled CFU):

```
at+ccfc=0,2
+CCFC: 0,1,"+493012345678",145
+CCFC: 0,2,"+493012345678",145
+CCFC: 0,4,"+493012345678",145
OK
```

To erase the registered CFU destination number:

```
at+ccfc=0,4
OK
```

Now, when you check the CFU status, no destination will be indicated:

```
at+ccfc=0,2
+CCFC: 0,1
+CCFC: 0,2
+CCFC: 0,4
```

www.sendsms.cn

4.7 AT+CCLK Real Time Clock

Test command AT+CCLK=?	Response **OK**
Read command AT+CCLK?	Response **+CCLK: <time>** **OK/ERROR/+CME ERROR** Parameter: **<time>:** string type value; format is "yy/MM/dd,hh:mm:ss", where characters indicate year (two last digits), month, day, hour, minutes, seconds; e.g. 6th of May 2001, 22:10:00 hours equals to “01/05/06,22:10:00"
Write command AT+CCLK=<time>	Response **OK/ERROR/+CME ERROR** Parameter: **<time>** see read command
Reference GSM 07.07	Note • **<time>** is retained if the device enters the Power Down mode via AT^SMSO (pg. 153). • **<time>** is lost if power is totally disconnected and if no separate battery back-up for the clock is provided via the ZIF cable. In this case, the clock starts with <time> = “00/01/01,00:00:00” upon next power-up. • See AT+CALA, pg. 53. • When the GSM engine wakes up to Alarm mode, the system takes 1s to re-initialize the RTC and to update the current time. Therefore, it is recommended to wait 1s before using the AT+CCLK command (for example 1s after ^SSYSTART has been output).

www.sendsms.cn

4.8 AT+CEER Extended error report

Test command AT+CEER=?	Response **OK**
Execute command AT+CEER	TA returns an extended error report of the reason for the last call release and location. Response **+CEER: <location ID>, <reason > , <ss_release>OK** Parameter **<location ID>** Location ID as number code (see subclause 7.1.5) **<reason>** Reason for last call release as number code (see subclause 7.1.5) **<ss_release>** Release cause for last Supplementary Service Call (see subclause 7.1.13)
Reference GSM 07.07	Note • AT+CEER is not available for data calls, please use ATS18=1. • Default output in the case of a no-error-situation is **+CEER: 0,0,0**.

www.sendsms.cn

4.9 AT+CFUN Set phone functionality

The AT+CFUN command serves to query or select the level of functionality <**fun**> of the ME. Level "full functionality" is where high current is drawn, depending on the operating mode, e.g. IDLE, TALK or DATA mode. "Minimum functionality" is where minimum power is drawn, referred to as SLEEP mode.

For detailed information on the various operating modes and the current consumption please see the "Hardware Interface Description" supplied with your GSM engine.

Test command AT+CFUN=?	Response **+CFUN:** (list of supported <**fun**>s), (list of supported <**rst**>s) If error is related to ME functionality: **+CME ERROR: <err>** Parameter See below
Read command AT+CFUN?	Response **+CFUN: <fun>** If error is related to ME functionality: **+CME ERROR: <err>** Parameter See below
Write command AT+CFUN=[<fun>[,<rst>]]	Response **OK** If error is related to ME functionality: **+CME ERROR: <err>** Parameter <**fun**> 0 Minimum functionality (SLEEP mode) AT+CFUN=0 disconnects any call in progress. The SLEEP mode starts after remaining network activities are terminated. While SLEEP mode is in effect, the AT interface is not accessible. Consequently, once you have issued AT+CFUN=0, **do not send** further characters. Otherwise these characters remain in the input buffer and may delay the output of an URC (see pg. 175, e.g. "**RING**"). 1 Full functionality (IDLE, TALK, DATA, mode) <**rst**> 0 The <**rst**> parameter can only be used if +CFUN=1. Due to the command syntax, you need to enter <**fun**>, followed by <**rst**>, where <**fun**> is only a placeholder and has no effect. See examples below. 1 ME resets and restarts to full functionality. After reset and restart, PIN 1 authentication is necessary. Therefore, you are required to use AT+CPIN again. If autobauding is enabled it is recommended to wait 3 to 5 seconds before entering the first AT command. For details on autobauding refer to Chapter 2.45.1

www.sendsms.cn

Reference GSM 07.07	Note • To check that ME has entered the SLEEP mode, it is recommended to measure the supply current. Depending on the configuration of the SYNC pin, the SLEEP mode may also be indicated by a status LED (see „AT^SSYNC Configure SYNC Pin“, pg. 169). • When in SLEEP mode, the following events may cause the ME to wake up: incoming call, Real Time Clock alarm, falling edge of RTS (RS-232 levels) and receipt of an unsolicited result code (URC, see chapter 7.1.3). • In multiplex mode, the CFUN profile is shared by all multiplexer channels. When you change the CFUN state on one logical channel, all other logical channels adopt the same state.
Example 1	To check the level of functionality use the read command: AT+CFUN? +CFUN: 1 Default mode after ME was restarted. Remember that the AT interface is not accessible in SLEEP mode. Consequently, the read command is only useful when the ME is set to full functionality.
Example 2	To set the ME to SLEEP mode enter AT+CFUN=0 OK When, for example, an SMS is being received and indicated by an unsolicited result code (URC), the ME wakes up to full operation. +CMTI: "SM",5 Note that the URC used in this example will appear only if CMTI=1,1 was configured before. See Chapters 5.10 and 7.1.3. After this, you may want to verify the operating status: AT+CFUN? +CFUN: 1 Indicates that ME has entered full functionality mode.
Example 3	To reset and restart the ME: AT+CFUN=1,1 or alternatively, AT+CFUN=0,1 OK ^SSYSTART Note that ^SSYSTART appears only if AT+IPR≠0. If the ME is in autobaud mode, it is recommended to wait 3 to 5 seconds before entering the first AT command. After the GSM engine was reset and restarted you are required to enter PIN 1: AT+CPIN +CPIN: SIM PIN OK

www.sendsms.cn

4.10 AT+CGMI Request manufacturer identification

Test command	Response
AT+CGMI=?	**OK**
Execute command	Response
AT+CGMI	TA returns manufacturer identification text. **SIEMENS** **OK**
Reference	Note
GSM 07.07	See also ”AT+GMI Request manufacturer identification”.

4.11 AT+CGMM Request model identification

Test command	Response
AT+CGMM=?	**OK**
Execute command	Response
AT+CGMM	TA returns product model identification text. **TC35** **OK**
Reference	Note
GSM 07.07	See also ”AT+GMM Request TA model identification”.

www.sendsms.cn

4.12 AT+CGMR Request revision identification of software status

Test command	Response
AT+CGMR=?	OK
Execute command	Response
AT+CGMR	TA returns product firmware version identification text. **REVISION x.yy** **OK** x.yy Version x and variant yy of software release
Reference	Note
GSM 07.07	See also AT+GMR Request TA revision identification of software status

4.13 AT+CGSN Request product serial number identification (IMEI) identical to GSN

Test command AT+CGSN=?	Response **OK**
Execute command AT+CGSN	Response TA returns identification text for determination of the individual ME. **<sn> OK** Parameter **<sn>** IMEI of the telephone (International Mobile station Equipment Identity)
Reference GSM 07.07	Note See also "AT+GSN Request TA serial number identification".

4.14 AT+CHLD Call hold and multiparty

Test command AT+CHLD=?	Response **+CHLD:** (list of supported **<n>**s) **OK**
Execute command AT+CHLD=[<n>]	Response TA controls the supplementary services Call Hold, MultiParty and Explicit Call Transfer. Calls can be put on hold, recovered, released, added to conversation and transferred. Note: Supplementary services are only applicable to teleservice 11 (Speech telephony). **OK** If error is related to ME functionality: **+CME ERROR: <err>** Parameter **<n>** 0 Terminate all held calls; or set UDUB (User Determined User Busy) for a waiting call, i.e. reject the waiting call. 1 Terminate all active calls (if any) and accept the other call (waiting call or held call) 1X Terminate the active call X (X= 1-7) 2 Place all active calls on hold (if any) and accept the other call (waiting call or held call) as the active call 2X Place all active calls except call X (X= 1-7) on hold 3 Add the held call to the active calls
Reference GSM 07.07	Note In conflicting situations, e.g. when a waiting call comes while there are already held calls, the above procedures apply to the waiting call only. For example, **<n>=0** rejects the waiting call, but does not affect the held calls.

www.sendsms.cn

4.15 AT+CHUP Hang up call

Test command AT+CHUP=?	Response **OK**
Execute command AT+CHUP	Cancels all active and held calls. Response **OK/ERROR**
Reference GSM 07.07	Note **AT+CHUP** implements the same behaviour as **ATH** (see Chapter 2.12**)**.

4.16 AT+CIMI Request international mobile subscriber identity

Test command AT+CIMI=?	Response **OK**
Execute command AT+CIMI	Response TA returns < IMSI> for identifying the individual SIM which is attached to ME. **<IMSI> OK** If error is related to ME functionality: **+CME ERROR: <err>** Parameter <**IMSI**> International Mobile Subscriber Identity (string without quotes)
Reference GSM 07.07	Note

www.sendsms.cn

4.17 AT+CLCC List current calls of ME

Test command AT+CLCC=?	Response **OK** Parameters
Execute command AT+CLCC	Response TA returns a list of current calls of ME. If command successful, but no calls are available, no information response is sent to TE. **[+CLCC: <id1>,<dir>,<stat>,<mode>,<mpty>,** **[<number>,<type>,[<alpha>]]]** **[<CR><LF>+CLCC: <id2>,<dir>,<stat>,<mode>,<mpty>,** **[<number>,<type>,[<alpha>]]]** **[...]]] OK** If error is related to ME functionality: **+CME ERROR: <err>** Parameters **<idx>** Integer type; call identification number as described in GSM 02.30[19] subclause 4.5.5.1; this number can be used in +CHLD command operations **<dir>** 0 mobile originated (MO) call 1 mobile terminated (MT) call **<stat>** state of the call: 0 active 1 held 2 dialing (MO call) 3 alerting (MO call) 4 incoming (MT call) 5 waiting (MT call) **<mode>** bearer/teleservice: 0 voice 1 data 2 fax 9 unknown **<mpty>** 0 call is not one of multiparty (conference) call parties 1 call is one of multiparty (conference) call parties **<number>** string type phone number in format specified by <type> **<type>** type of address octet in integer format; 145 when dialling string includes international access code character "+", otherwise 129 **<alpha>** string type alphanumeric representation of <number> corresponding to the entry found in phonebook; used character set should be the one selected with command Select TE Character Set +CSCS
Reference GSM 07.07	Note

www.sendsms.cn

4.18 AT+CLCK Facility lock

Test command AT+CLCK=?	Response **+CLCK**: (list of supported <**fac**>**s) OK** Parameter See execute command
Execute command AT+CLCK=<fac>, <mode> [,<passwd> [,<class>]]	Use this command to lock, unlock or interrogate a ME or a network facility <**fac**>. The command can be aborted when network facilities are being set or interrogated. Response If <**mode**> <> **2** and command is successful **OK** If <**mode**> = **2** and command is successful **+CLCK: <status>[,<class1>[<CR><LF>** **+CLCK: <status>, class2....]] OK** If error is related to ME functionality: **+CME ERROR: <err>** Parameter <**fac**> Phone security locks set by client or factory: "SC" SIM (lock SIM cards). SIM requests password upon ME power-up and when this lock command is issued. "SC" lock is protected with SIM PIN1. The number can be modified with AT+CPWD or AT^SPWD. See examples in Chapter 0 for further explanations. "PS" Phone locked to SIM card. ME requests password when other than current SIM card is inserted. ME may remember numbers of previously used cards, thus not requiring password when they are inserted. If set individually by the client, the password for the "PS" lock can be specified with AT+CPWD or AT^SPWD. If set by factory (e.g. for a prepaid mobile), the password is supplied by the provider or operator. "FD" SIM fixed dialling memory: If the mobile is locked to "FD", only the phone numbers stored to the "FD" memory can be dialled (depending on the SIM card, usually up to 7 numbers). If PIN2 authentication has not been performed during the current session, PIN2 is requested as <passwd>. "CS" Keypad lock (not supported since keypad cannot be directly connected to the GSM engine) Note: Primarily intended for the client to take safety precautions, "SC", "PS" and "FD" can be configured individually. "PS" may also be factory set. "PS" lock is frequently referred to as "phone lock", or "device lock". Accordingly, the password may be called "phone code" or "device code". The "PS" password is not associated with the PUK of the SIM card. If incorrectly entered three times, the Master Phone Code is required to lift the lock. Once the Master Phone Code has been acctepted, the mobile is operational, and the "PS" lock is no longer active. If needed it must be set once again. See Chapter 4.31.1 and examples below for further details.

www.sendsms.cn

Factory set SIM locks
"PF" lock Phone to the very First SIM card
"PN" Network Personalisation
"PU" Network subset Personalisation
"PP" Service Provider Personalisation
"PC" Corporate Personalisation

Note: Typical examples of factory set SIM locks are prepaid phones or network locks, used to restrict the operation of a mobile to a specific provider or operator. The client should be aware that each of these lock types can only be unlocked if the associated password is available. For example, a mobile can be locked to accept only SIM cards from the respective provider, or even one single SIM card. Once a different SIM card is inserted the ME will prompt the client to enter a specific code. This is not the PUK of the SIM card, but usually an 8-digit code which needs to be requested from the provider.
The locks can only be set by the manufacturer and need to be agreed upon between the parties concerned, e.g. provider, operator, distributor etc. on the one side and the manufacturer on the other side. For details contact your local dealer or Siemens AG.
See Chapter 4.31 and 4.31.1 for further instructions.

Supplementary Service: Call barring:
"AO" BAOC (Bar All Outgoing Calls)
"OI" BOIC (Bar Outgoing International Calls)
"OX" BOIC-exHC (Bar Outgoing International Calls except to Home Country)
"AI" BAIC (Bar All Incoming Calls)
"IR" BIC-Roam (Bar Incoming Calls when Roaming outside the home country)
"AB" All Barring services (applicable only for <mode>=0)
"AG" All outGoing barring services (applicable only for <mode>=0)
"AC" All inComing barring services (applicable only for <mode>=0)

Note: The availability of the Supplementary Services varies with the network. To benefit from call barring the client will need to subscribe them, though a limited number of call barring types may be included in the basic tariff package. Call barring is protected by a password supplied from the provider or operator. Usually there is one password which applies to all call barring options. For details contact your provider.

<**mode**> 0 unlock
1 lock
2 query status

<**passwd**> password
See Chapters 4.34 and 6.34 for instructions of how to specify passwords.

<**class**> sum of integers each representing a <**class**> of information:
1 voice
2 data
4 fax
7 sum of the integers 1, 2 and 4. Call barring for voice, data and fax.
8 short message service
See examples in 4.18.3 for correct handling of class numbers.

<**status**> 0 off
1 on

www.s8adsms.cn

Reference	Note
GSM 07.07	*# codes sent with ATD cannot be used to enter the Master Phone Code.

4.18.1 Examples: Enabling / disabling PIN 1 authentication

Example 1	To lock or unlock the SIM card: The "SC" parameter enables or disables the SIM PIN authentication (PIN 1) when you power up the GSM engine: `AT+CLCK="SC",1,9999` Activates SIM card lock. `OK` As a result, SIM PIN 1 must be entered to enable ME to register to the GSM network. `AT+CLCK="SC",0,9999` Unlocks SIM card. `OK` When powered up, ME registers to the GSM network without requesting SIM PIN1. Note: Depending on the services offered by the provider, this feature is not supported by all SIM card types. If so, the command returns ERROR when you attempt to unlock the card.
Example 2	To query the status of the SIM card lock: `AT+CLCK="SC",2` `+clck: 1` SIM card is locked. SIM PIN1 must be entered to enable ME to register to the GSM network.

4.18.2 Examples: Phone lock

Example 1	Be sure that PIN 1 authentication is valid:
	`AT+CPIN?`
	`+CPIN: SIM PIN`
	`OK`
	
	`AT+CPIN=9999`
	`OK`
	
	To lock the mobile to the currently inserted SIM card, first specify a password (= a phone code):
	`AT+CPWD="PS",,1234` If "PS" lock has not been set before: enter new password.
	`OK`
	`or:`
	`AT+CPWD="PS",1234,3333` To replace existing "PS" password: Enter old and new one.
	`OK`
	
	Then, activate the phone lock:
	`AT+CLCK="PS",1,3333` Locks the mobile to the current SIM card.
	`OK`

www.sencsms.cn

Example 2	To deactivate the phone lock: AT+CLCK="PS",0,3333 Enter lock type "PS", followed by 0 to lift the OK lock. Then type "PS" lock password. As a result, the mobile accepts any SIM card and can be operated after the card's SIM PIN 1 was entered.
Example 3	To operate the mobile with the SIM card for which "PS" lock was activated: AT+CPIN? Enter SIM PIN used when locking the mobile. +CPIN: SIM PIN "PS"lock password is not needed. AT+CPIN=9999 OK
Example 4	To operate the mobile with other SIM card than the one used for the "PS" lock: Enter SIM PIN of present card, followed by "PS" lock password. AT+CPIN? Enter SIM PIN of present SIM card. +CPIN: SIM PIN AT+CPIN=1111 OK SIM PIN accepted. AT+CPIN? +CPIN: PH-SIM PIN "PS" lock password is required. AT+CPIN=3333 OK "PS" lock password has been accepted.
Example 5	Attempt to unblock the "PS" lock using an invalid password: AT+CPIN? Enter SIM PIN of present SIM card. +CPIN: SIM PIN AT+CPIN=1111 OK SIM PIN accepted. AT+CPIN? +CPIN: PH-SIM PIN "PS" lock password is required. AT+CPIN=4444 Bad password is given: +CME ERROR: incorrect password After the "PS" lock password was incorrectly entered three times in a row: AT+CPIN? +CPIN: PH-SIM PUK Master Phone Code is required (8-digit code available from the manufacturer. See Chapter 4.31.1). AT+CPIN=12345678 Master Phone Code has been accepted. As a result, the mobile is operational, and the "PS" lock is totally removed. If needed, it must be set once again.

www.sendsms.cn

Example 6	Attempt to unblock the "PS" lock using an invalid Master Phone Code: Due to the timing algorithm explained in Chapter 4.31.1 the intervals between each attempt are getting longer. See also AT^SPIC in Chapter 6.30.
Example 7	As an alternative to the AT+CPIN command you can use AT+CPWD. In this case the following syntax shall be observed: AT+CPWD=PS,Master Phone Code[,new password]. `AT+CPWD=PS,12345678` Deactivates the "PS" lock. Or `AT+CPWD=PS,12345678,3333` Deactivates the present "PS" lock and sets a new "PS" lock.

4.18.3 Examples: Call barring

Please note that when you configure or query call barring without specifying any classes, the settings will refer to classes 1, 2 and 4 only (default setting). Class 8 (SMS) will not be included by default and must be explicitly entered as can be seen from the following examples.

www.sendsms.cn

Remember that most of the call barring types have to be subscribed to. Usually, the service is subject to a password supplied from the provider.

Example 1	When checking the status of barring for outgoing international calls without specifying classes, please note that the ME returns only the status of voice, data, fax calls. The status of SMS will not be indicated. `at+clck=oi,2,0000` or without <passwd>: `at+clck=oi,2` `+CLCK: 1,1` outgoing international voice calls barred `+CLCK: 1,2` outgoing international data calls barred `+CLCK: 1,4` outgoing international fax calls barred OK
Example 2	To check the call barring status of all services, you are required to enter the integer sum referring to all classes: `at+clck=oi,2,0000,15` or without <passwd>: `at+clck=oi,2,,15` `+CLCK: 1,1` outgoing international voice calls barred `+CLCK: 1,2` outgoing international data calls barred `+CLCK: 1,4` outgoing international fax calls barred `+CLCK: 1,8` outgoing international SMS barred OK
Example 3	To activate call barring for outgoing international voice and data calls: `at+clck=oi,1,0000,3` (where 3 is the sum of class 1 + class 2) OK
Example 4	To disable call barring for outgoing international fax (class 4) and SMS (class 8) calls: `at+clck=oi,0,0000,12` (where 12 is the sum of class 4 + class 8) OK

Example 5	To check whether actions in example 3 and 4 were successful, check the status of barring for all outgoing international calls:
	`at+clck=oi,2,0000,15`
	
	`+CLCK: 1,1` outgoing international voice calls barred
	`+CLCK: 1,2` outgoing international data calls barred
	`+CLCK: 0,4` outgoing international fax calls are allowed
	`+CLCK: 0,8` outgoing international SMS are allowed
	`OK`

Example 6	To allow outgoing international calls without specifying classes:
	`at+clck=oi,0,0000,15`
	`OK`
	
	To query status without specifying classes:
	`at+clck=oi,2`
	`+CLCK: 0,1` outgoing international voice calls allowed
	`+CLCK: 0,2` outgoing international data calls allowed
	`+CLCK: 0,4` outgoing international fax calls allowed
	
	To query status for all classes:
	`at+clck=oi,2,0000,15`
	`+CLCK: 0,1`
	`+CLCK: 0,2`
	`+CLCK: 0,4`
	`+CLCK: 0,8`
	`OK`

www.sendsms.cn

4.19 AT+CLIP Calling line identification presentation

Test command AT+CLIP=?	This command refers to the GSM supplementary service CLIP (Calling Line Identification Presentation) that enables a called subscriber to get the calling line identity (CLI) of the calling party when receiving a mobile terminated call. Response + **CLIP:** (list of supported <**n**>s) **OK** Parameter See write command
Read command AT+CLIP?	Response **+CLIP: <n>, <m> OK** If error is related to ME functionality: **+CME ERROR: <err>** Parameter See write command
Write command AT+CLIP=<n>	Set command enables or disables the presentation of the CLI at the TE. It has no effect on the execution of the supplementary service CLIP in the network. Response **OK** If error is related to ME functionality: **+CME ERROR: <err>** Parameter **<n>** 0 suppress unsolicited result codes 1 display unsolicited result codes **<m>** 0 CLIP not provisioned 1 CLIP provisioned 2 unknown
Unsolicited result code	When CLIP is enabled at the TE (and is permitted by the calling subscriber), an unsolicited result code is returned after every RING (or +CRING: <type>) at a mobile terminating call. Voice call response format: **+CLIP: <number>, <type>,,,,<CLI validity>** Data/FAX call response format: **+CLIP: <number>, <type>** Parameter **<number>** string type phone number of calling address in format specified by **<type>** **<type>** type of address octet in integer format; **145** when dialling string includes international access code character "+", otherwise **129**. **<CLI validity>** 0 CLI valid 1 CLI has been withheld by the originator. 3 CLI is not available due to interworking problems or limitations of originating network. **<number>** shall be an empty string ("") and **<type>** value will not be significant.
Reference GSM 07.07	Note

www.sendsms.cn

4.20 AT+CLIR Calling line identification restriction (by *# sequence)

The AT+CLIR command is not supported. Instead, you can handle CLIR on a call-by-call basis using the ATD command and a *# sequence.

Read command ATD*#31#	Run the Read command to query status: Response **+CLIR: <n>,<m>** Defined values **<n>** (parameter shows the settings for outgoing calls): 0 presentation indicator is used according to the subscription of the CLIR service 1 CLIR invocation 2 CLIR suppression **<m>** (parameter shows the subscriber CLIR service status in the network): 0 CLIR not provisioned 1 CLIR provisioned in permanent mode 2 unknown (e.g. no network, etc.) 3 CLIR temporary mode presentation restricted 4 CLIR temporary mode presentation allowed
Execute commands ATD*31#<Phonenumber>[;] ATD#31#<Phonenumber>[;]	The Execute commands allow you to enable or disable the presentation of your phone number to the called party when you set up a call: Deactivate CLIR = enable presentation of own phone number to called party Activate CLIR = suppress presentation of own phone number to called party
	Note: <Phonenumber> = phone number of called party

www.sendsms.cn

4.21 AT+CLVL Loudspeaker volume level

Test command AT+CLVL=?	Response +**CLVL**: (list of supported <level>s)OK
Read command AT+CLVL?	Response +**CLVL:** <level> **OK/ERROR/+CME ERROR**
Write command AT+CLVL=<level>	Response **OK/ERROR/+CME ERROR** Parameter <**level**> Loudspeaker Volume Level (0-4)
Reference GSM 07.07	Note • The volume level cannot be modified in audio mode 1. • The changed volume level will not be saved with AT^SNFW, instead it will be saved after AT^SMSO only.

www.sendsms.cn

4.22 AT+CMEE Report mobile equipment error

Test command AT+CMEE=?	Response **+CMEE:** (list of supported <**n**>**s) OK** Parameter See write command
Read command AT+CMEE?	Response **+CMEE: <n> OK** Parameter See write command
Write command AT+CMEE=<n>	This command controls the presentation of the result codes **+CME ERROR:** <**err**> and **CMS:**<**err**> that indicate errors relating to ME functionality. When you power down or reset the ME with AT+CFUN=1,1 the setting will be reset to its default. The levels 1 or 2 need to be selected every time you reboot the ME, or may be included, for permanent use, in the user profile saved with AT&W. Response **OK** Parameter <**n**> 0 disable result code (only 'ERROR' will be displayed) 1 enable result code and use numeric values 2 enable result code and use verbose values
Example	To obtain enhanced error messages it is recommended to choose <n>=2. AT+CMEE=2 OK
Reference GSM 07.07	Note • The possible error result codes are listed in chapter 7 • In multiplex mode (see “AT+CMUX Enter multiplex mode”, pg. 80) the setting applies only to the logical channel where selected. The setting on the other channels may differ.

www.sendsms.cn

4.23 AT+CMUT Mute control

Test command AT+CMUT=?	Response **+CMUT**: (list of supported **<n>s**) **OK**
Read command AT+CMUT?	Response **+CMUT: <n>** **OK/ERROR/+CME ERROR**
Write command AT+CMUT=<n>	Response **OK/ERROR/+CME ERROR** Parameter **<n>:** 0 mute off 1 mute on
Reference GSM 07.07	Note

www.sendsms.cn

4.24 AT+CMUX Enter multiplex mode

TC35 / TC37 and TC35 Terminal support Multiplex mode according to the GSM 07.10 Multiplexer Protocol and enables one physical serial asynchronous interface to be partitioned into three virtual channels. This allows you to take advantage of up to 3 simultaneous sessions running on the serial interface. Each session represents a stream of bytes conveying various data; such as voice, fax, data, SMS, phonebook information, battery status etc. For example, you can transfer data over one channel while two further channels are free to control the GSM engine with AT commands. It should be noted, however, that voice, data or fax calls cannot be established simultaneously, since the mobile device provides just one air interface to the network.

To make the three virtual interfaces (channels) available, both the GSM engine and the customer application must contain Mux components which communicate over the Multiplexer Protocol. In the GSM engine, the Mux/MP software is already incorporated. The customer application should either integrate the TC35 Mux/MP software or include a Mux/MP program developed by the customer. The AT+CMUX write command starts the multiplexing protocol control channel.

Refer to /3/ which provides to a detailed description of the Multiplex functionality implemented in TC35 / TC37 and TC35 Terminal and step-by-step instructions of how to install and configure the MUX mode. The source files of the TC35 Mux/MP software can be supplied on request. Please contact your local dealer to obtain the latest installation software and user's guide.

www.sendsms.cn

Test command AT+CMUX=?	Response **+CMUX:** (list of supported <**mode**>s) **OK**
Read command AT+CMUX?	Response **+CMUX:** <**mode**> **OK** If error is related to ME functionality: **+CME ERROR:** <**err**>
Write command AT+CMUX=<mode>	Response **OK** If error is related to ME functionality: **+CME ERROR:** <**err**> Parameter <**mode**> multiplexer transparency mechanism 0 basic option Subparameters defined in GSM07.07 are adjusted for control and logical channels as follows: <**subset**> 0 UIH frames used only (control channel)
Reference GSM 07.07	Note 1. The write command is used to enter the multiplex mode. The setup of the logical channels is initiated by the TE, i.e. the TE acts as initiator. This means that the TE shall ensure that logical channels are established before any further actions on the channels can be started. 2. There is a timeout of five seconds, if the multiplexer protocol is enabled and no multiplexer control channel is established. The GSM engine re-

	turns to the AT command mode. 3. There are various options to switch from data mode to command mode: a) Escape sequence +++ b) Circuit 108/2 (DTR) changes from ON to OFF, reaction depends on command at&d (caution if AT&D0: TA ignores status on DTR). c) The message Modem Status Command (MSC) for control channel is defined by the multiplexer protocol GSM07.10. MSC conveys V.24 signals. Bit 3 of Control Signal Octet is DTR, reaction depends on command at&d (caution if AT&D0: TA ignores status on DTR). 4. The parameter maximum frame size (N1) of AT+CMUX in GSM07.07 is fixed to 97 and cannot be changed. All other parameters are not available. 5. Multiplex mode can be terminated by **AT^SMSO** (‚AT^SMSO Switch off mobile station" pg. 152). It has to be reestablished after power-on.

www.sendsms.cn

4.24.1 Restricted use of AT commands in Multiplex mode

In Multiplex mode, the operation of several AT commands varies from the normal mode. This chapter summarizes the concerned commands. For general rules and restrictions to be considered in Multiplex mode please refer to /3/.

Data and fax calls can only be set up on logical channel 1. Due to this restriction, AT commands have a different behaviour on channels 2+3 compared to channel 1. Several commands are not available, others return different responses. These commands are listed in the table below:

Table 6: Availability of AT commands on virtual channels

Command	Behaviour on channel 1	Differences on channel 2+3
+++	as described	not usable
ATE	as described	as described
AT+CBST	as described	not usable
AT+CR	as described	not usable
AT+CRLP	as described	not usable
AT+F.... (Fax commands)	as described	not usable
AT&C	as described	not usable
AT&D	as described	not usable
AT&F	as described	data call parameters not changed
AT&S	as described	not usable
AT&V	as described	data call parameters not displayed
ATA	as described	no data calls
ATD	as described	no data calls
ATDI<n>	as described	not usable
ATO	as described	not usable
ATS0 [1])	as described	not usable
ATS3 [1])	as described	as described
ATS4 [1])	as described	as described
ATS5 [1])	as described	not usable

Command	Behaviour on channel 1	Differences on channel 2+3
ATS6 [1])	as described	not usable
ATS7 [1])	as described	not usable
ATS8 [1])	as described	not usable
ATS10 [1])	as described	not usable
ATS18 [1])	as described	not usable
AT\Q	as described	not usable
ATZ	as described	data call parameters not changed

1) Siemens GSM engines support the registers S0 - S29. You can change S0, S3, S4, S5, S6, S7,S8, S10 and S18 using the related ATSn commands (see starting from pg. 23). The other registers are read-only and for internal use only!

Table 7: Summary of AT commands with different behaviour in Multiplex mode

Command	Description	Chapter
ATH	Terminates any call in progress, no matter what channel was used to enter ATH	2.12
AT&V	Different default configurations on channels 1, 2 and 3	2.37
AT+IPR	Before you start Multiplex mode, it is recommended to set the ME to 57600 bps, especially if you want to use all the three channels. Once it is activated, the bitrate on channels 2 + 3 should be set to 19200 bps.	2.45
AT+IPR=0	Autobauding is not compatible with Multiplex mode. It is neither possible to start MUX when autobauding is active, nor to set autobauding during Multiplex mode.	2.45.1
AT+CALA	Alarm calls can be separately configured on each channel. The read command returns the total number of alarm calls activated on all channels.	4.2
AT+CBST	14400 bps bearer capabilities are not available in Multiplex mode. Incoming calls are negotiated at 9600bps. If multiplex mode is active, the bearer capability automatically switches to +CBST=7,0,1.	4.5
AT+CMEE	Presentation mode can be separately configured for each channel.	4.22
AT+CNMA	If Multiplex mode is activated the +CNMI parameter will be set to zero on all channels, if one channel fails to acknowledge an incoming message within the required time.	5.9
AT+CNMI	Phase 2+ parameters can only be used on one channel. The parameter for <**mt**> and <**ds**> on the other channels have to be set to zero. If either a SM or a Status Report is not acknowledged, all +CNMI parameter will be set to zero on all channels.	5.10

www.sendsms.cn

4.25 AT+COPN Read operator names

Test command	Response
AT+COPN=?	**OK**
Execute command AT+COPN	TA returns the list of operator names from the ME. Each operator code <numericn> that has an alphanumeric equivalent <alphan> in the ME memory is returned. Response +COPN: numeric <**numeric1**>,long alphanumeric <**alpha1**><**CR**><**LF**> +**COPN:.....OK** If error is related to ME functionality: +**CME ERROR:** <**err**> Parameter <**numericn**> string type; operator in numeric form; GSM location area identification number <**alphan**> string type; operator in long alphanumeric format; can contain up to 16 characters
Reference GSM 07.07	Note See also AT^SPLM, pg. 164

www.sendsms.cn

4.26 AT+COPS Operator selection

This command can be used to query the present status of the ME's network registration and to determine whether automatic or manual network selection shall be used.

Automatic mode:	Lets the ME automatically search for the home operator. If successful the ME registers to the home network and enters the IDLE mode. If the home network is not found, ME goes on searching. If then a permitted operator is found, ME registers to this operator. If no operator is found the ME remains unregistered.
Manual mode:	Desired operator can be manually entered, using the AT+COPS write command syntax. If operator is found, ME registers to this operator. If the selected operator is forbidden, the ME remains unregistered.
Manual/automatic:	In this mode, the ME first tries to find the operator that was manually entered. If the ME fails to register to this operator, then it starts to select automatically another network.

Test command
AT+COPS=?

TA returns a list of quadruplets, each representing an operator present in the network. The list of operators is presented in the following order: Home network, networks referenced in SIM, and other networks. Two commas in a succession (,,) are a placeholder for the non-implemented <format>1 (short alphanumeric operator name).

Response

+COPS: (list of supported (<**stat**>, long alphanumeric <**oper**>,, numeric <**oper**>s) [,(list of supported <**mode**>s), (list of supported <**format**>s)] **OK**

If error is related to ME functionality:
+CME ERROR: <**err**>

Parameters

<**stat**>	0	unknown
	1	operator available
	2	current operator (registered)
	3	forbidden operator
<**oper**>	operator as per <**format**>	
<**mode**>	0 - 4	see write command
<**format**>	0 - 2	see write command

Read command
AT+COPS?

TA returns the current mode and, if registered, the currently used operator. If the ME is unregistered, <**format**> and <**oper**> are omitted.

Response

+COPS: <mode>[, <format>[, <oper>]] OK

If error is related to ME functionality:
+CME ERROR: <**err**>

Parameters

See write command

Write command
AT+COPS=
<mode>
[,<format>[,<oper>]]

The write command allows you to choose whether the GSM network operator is to be selected automatically or manually. When using the manual mode, the <operator> must be entered, no matter whether you want to search for the home operator or another one.

www.sendsms.cn

	Response **OK** If error is related to ME functionality: **+CME ERROR: <err>** Parameters <**mode**> 0 automatic mode; <oper> field is ignored 1 manual operator selection <oper> field must be present, <**format**> can only be = 2 2 manually deregister from network and remain unregistered until mode 0,1,4 is selected 3 set <**format**> for read command +COPS? 4 combination of manual/automatic mode; if manual selection fails, ME switches to automatic mode **(<mode>=0)**. (<**oper**> field must be present) <**oper**> operator as per <**format**> <**format**> 0 long format alphanumeric <**oper**>; up to 16 characters 2 numeric <**oper**>; GSM Location Area Identification number
Reference GSM 07.07	Note

Example 1	To query the present status of ME's network registration using the test command:
	`AT+COPS=?`
	`+COPS: (2,"D2",,"26202"),(3,"E-Plus",,"26203"),(3,"T-D1",,"26201"),(3,"Interkom",,"26207"),,(0-4),(0,2)`
	`OK`
	Registered operator is D2. The other operators are present in the network, but not allowed to be used with the current SIM card.
	
	To query the status of the ME's network registration using the read command:
	`AT+COPS?`
	`+COPS: 0,0,"D2"` (command returns mode, format, registered operator)
	`OK`

Example 2	Attempt to manually select a forbidden operator:
	`AT+COPS=1,2,26203`
	`OK`
	
	If the selected operator was not allowed, the ME is now unregistered. The read command will return only the mode, but no operator:
	`AT+COPS?`
	`+COPS: 1`
	
	In this case, the test command returns only that the desired operator is available (<stat=1). Nevertheless, the registration is not successful. Please use the AT+CREG command (Chapter 4.37) to verify the registration status.
	`AT+COPS=?`
	`+COPS: (1,"D2",,"26202"),(3,"E-Plus",,"26203"),(3,"T-D1",,"26201"),(3,"Interkom",,"26207"),,(0-4),(0,2)`
	`OK`
	`AT+CREG?`
	`+CREG: 0,3` (where 3 = registration denied)
	`OK`

www.sendsms.cn

4.27 AT+CPAS Mobile equipment activity status

Test command AT+CPAS=?	Response **+CPAS:** (list of supported <**pas**>s) **OK** Parameter See execute command
Execute command AT+CPAS	Response TA returns the activity status of ME. **+CPAS: <pas> OK** If error is related to ME functionality: **+CME ERROR: <err>** Parameter <**pas**> 0 ready 3 incoming call (ringing) 4 call in progress or call hold
Reference GSM 07.07	Note

www.sendsms.cn

4.28 AT+CPBR Read current phonebook entries

Test command AT+CPBR=?	Response TA returns location range supported by the current storage as a compound value and the maximum length of <**number**> and <**text**> fields. Note: If SIM storage is selected, the length may not be available. If storage does not offer format information, the format list should be empty parentheses. **+CPBR:** (list of supported <**index**>s), <**nlength**>**,** <**tlength**> **OK** If error is related to ME functionality: **+CME ERROR: <err>** Parameter <**index**> supported range of location numbers (maximum number depends on storage type) <**nlength**> max. length of phone number, normally 20, for a small number of locations 40 <**tlength**> max. length of text assigned to phone number (depending on storage type 16 - 18 characters including blanks)
Execute command AT+CPBR=<index1>[,<index2>]	Response TA returns phonebook entries in location number range <**index1**> **...** <**index2**> from the current phonebook memory storage selected with +CPBS. If <**index2**> is left out, only location <**index1**> is returned. **+CPBR: <index1>, <number>, <type>, <text>[<CR><LF>+CPBR: .....+CPBR: <index2>, <number>, <type>, <text>] OK** If error is related to ME functionality: **+CME ERROR** Parameter <**index1**> location number where reading starts <**index2**> location number where reading ends <**number**> phone number <**type**> type of address octet in integer format; **145** when dialling string includes international access code character "+", otherwise **129**. <**text**> string type field of maximum length <**tlength**>. Character set as specified with +CSCS.
Example	1. First, run the *Test command* to find out the maximum range of entries stored in the active phonebook: AT+CPBR=? TA returns the supported values in the format: +CPBR: (1-100),20,17 where 100 is the supported range of location numbers, 20 is the length of the phone number and 17 is the maximum length of the text associated text. 2. Now, run the *Execute command* to display the phonebook entries sorted by location numbers. AT+CPBR =1,100 +CPBR 1,"+999999",145,"Charlie" +CPBR: 2,"+777777",145,"Bill" +CPBR: 3,"+888888",145,"Arthur" .....
Reference GSM 07.07	Note

www.sendsms.cn

4.29 AT+CPBS Select phonebook memory storage

Test command AT+CPBS=?	Response **+CPBS:** (list of supported <**storage**>s) **OK** If error is related to ME functionality: **+CME ERROR:** <**err**> Parameter See write command
Read command AT+CPBS?	Response TA returns currently selected memory: **+CPBS:** <**storage**>,<**used**>,<**total**> **OK** If error is related to ME functionality: **+CME ERROR:** <**err**> Parameter See write command
Write command AT+CPBS= <storage>	Response TA selects current phonebook memory storage, which is used by other phonebook commands. **OK** If error is related to ME functionality: **+CME ERROR:** <**err**>
	Parameter <**storage**> "SM" SIM phonebook (storage depends on SIM Card) "FD" SIM fixdialling phonebook (FD Phonebook storage pos.1-7). If the mobile is locked to FD, only the numbers stored to the FD memory can be dialled. To edit the FD phonebook PIN 2 is required. See AT+CLCK Facility lock and AT^SLCK Facility lock. "LD" SIM last-dialling-phonebook (LD Phonebook storage pos.1-10) (+CPBW not be applicable to this storage) "MC" ME missed (unanswered received) calls) (MC Phonebook storage pos.1-10) list (+CPBW not applicable to this storage "RC" ME received calls list (+CPBW not applicable for this storage) (RC Phonebook storage pos.1-10) "ON" SIM (or ME) own numbers (MSISDNs) list "ME" ME Phonebook (storage pos.1-50) <**used**> Integer type value indicating the number of used locations in selected memory <**total**> Integer type value indicating the maximum number of locations allowed in the selected memory
Reference GSM 07.07	Note This command can be used right after power-on to get selected <**storage**>. Since data need to be loaded from the SIM, values of <**used**> and <**total**> might not be available for the first 20 seconds.

www.sendsms.cn

4.30 AT+CPBW Write phonebook entry

Test command AT+CPBW=?	Response TA returns location range supported by the current storage, the maximum length of <**number**> field, supported number formats of the storage and the maximum length of <**text**> field. Note: The length may not be available while SIM storage is selected. If storage does not offer format information, the format list should be empty parentheses. **+CPBW:** (list of supported <**index**>**s**), <**nlength**>, (list of supported <**type**>**s**), <**tlength**> **OK** If error is related to ME functionality: **+CME ERROR:** <**err**> Parameter See write command.
Write command AT+CPBW= [<index>] [,<number> [[,<type>] [,<text>]]]	This command writes a phonebook entry to the memory location <**index**> of the active memory. The memory location number <**index**> is followed by the phone number <**number**> (in the format <**type**>) and the associated <**text**>. If writing fails, an ME error +CME ERROR: <**err**> is returned. Parameter <**index**> Location number within phonebook memory, total range is given in test command response <**number**> Phone number, maximum length is given as <**nlength**> in test command response <**type**> Type of phone number (address octet in integer format); **145** when dialling string includes international access code character "+", otherwise **129** (refer GSM 04.08 subclause 10.5.4.7) <**text**> Text assigned to the phone number, maximum length is given in test command response <**tlength**>. Character set as specified with +CSCS. See note below. <**nlength**> Max. length of phone number, normally 20, for a small number of locations 40 <**tlength**> Max. length of text assigned to phone number (depending on storage type 16 - 18 characters including blanks) Response **OK/ERROR/+CME ERROR** To delete a phonebook entry simply enter the location number: AT+CPBW=<**index**> To write a phonebook entry to the first free location number: AT+CPBW=,<**number**>,<**type**>,<**text**>
Reference GSM 07.07	Note If <**text**> contains characters which are coded differently in ASCII and GSM (e.g. Ä, Ö, Ü), these characters have to be entered via escape sequences as described in chapter „Supported character sets", pg. 9.

www.siemens.cn

4.31 AT+CPIN Enter PIN

Test command AT+CPIN=?	Response **OK**
Read command AT+CPIN?	Response TA returns an alphanumeric string indicating whether or not a password is required. **+CPIN: <code> OK** If error is related to ME functionality: **+CME ERROR: <err>** Parameter **<code>** SIM PIN authentication READY — PIN has already been entered. No further entry needed. SIM PIN — ME is waiting for SIM PIN1. SIM PUK — ME is waiting for SIM PUK1 if PIN1 was disabled after three failed attempts to enter PIN1. SIM PIN2 — ME is waiting for PIN2, when the attempt to access PIN2 requiring features was acknowledged with +CME ERROR:17 (e.g. if client attempts to edit the FD phonebook). SIM PUK2 — ME is waiting for PUK2 to unblock a disabled PIN2. Necessary if preceding command was acknowledged with error +CME ERROR:18. Phone security locks set by client or factory PH-SIM PIN — ME is waiting for phone-to-SIM card password if "PS" lock is active and user inserts other SIM card than the one used for the lock. ("PS" lock is also referred to as phone or antitheft lock). PH-SIM PUK — ME is waiting for Master Phone Code, if the above "PS" lock password was incorrectly entered three times. Factory set SIM locks PH-FSIM PIN — ME is waiting for phone-to-very-first-SIM card. Necessary when "PF" lock was set. When powered up the first time, ME locks itself to the first SIM card put into the card holder. As a result, operation of the mobile is restricted to this one SIM card (unless the PH-FSIM PUK is used as described below). PH-FSIM PUK — ME is waiting for phone-to-very-first-SIM card unblocking password to be given. Necessary when "PF" lock is active and other than first SIM card is inserted.

www.sendsms.cn

	PH-NET PIN — ME is waiting for network personalisation password PH-NET PUK — ME is waiting for network personalisation unblocking password PH-NS PIN — ME is waiting for network subset personalisation password PH-NS PUK — ME is waiting for network subset unblocking password PH-SP PIN — ME is waiting for service provider personalisation password PH-SP PUK — ME is waiting for service provider personalisation unblocking password PH-C PIN — ME is waiting for corporate personalisation password PH-C PUK — ME is waiting for corprorate personalisation unblocking password See Chapters 4.18 and 6.13 for information on lock types.
Write command AT+CPIN=<pin>[,<new pin>]	Response The write command lets the ME store the entered password. This may be for example the SIM PIN1 to register to the GSM network, or the SIM PUK1 to replace a disabled PIN with a new one, or the PH-SIM PIN if the client has taken precautions for preventing damage in the event of loss or theft etc. See above for the list of passwords. **OK** If error is related to ME functionality: **+CME ERROR: <err>** If no PIN request is pending (for example if PIN authentication has been done and the same PIN is entered again) ME responds **+CME ERROR: operation not allowed**. No action is required from your part. Parameter **<pin>** password (string type), usually SIM PIN1. If the requested password was a PUK, such as SIM PUK1 or PH-SIM PUK or PH-FSIM PUK or another password, then <pin> must be followed by <newpin>. **<new pin>** if the requested code was a PUK: specify a new password or restore the former disabled password. See Chapter 4.31.1 for more information about when you may need to enter the PUK.
Reference GSM 07.07	Note • Caution: After entering a password with AT+CPIN all other commands that need access to data on the SIM card may be blocked for up to 20 seconds! • Successful PIN authentication only confirms that the entered PIN was recognized and correct. The output of the result code **OK** does not necessarily imply that the mobile is registered to the desired network. Typical example: PIN was entered and accepted with **OK**, but the ME fails to register to the network. This may due to missing network coverage, denied network access with currently used SIM card, no valid roaming agreement between home network and currently available operators etc.

www.sendsms.cn

	The ME offers various options to verify the present status of network registration: For example, the AT+COPS? (Chapter 4.26) command indicates the currently used network. With AT+CREG (Chapter 4.37) you can also check the current status and activate an unsolicited result code which appears whenever the status of the network registration changes (e.g. when the ME is powered up, or when the network cell changes). • Wait 10 seconds after PIN input before using SMS related commands. • <pin> and <new pin> can also be entered in quotation marks (e.g. ”1234”). • To check the number of remaining to attempts to enter the passwords use the AT^SPIC command. See Chapter 6.30. • See also Chapter 7.2 „Summary of PIN requiring AT Commands“. • See Chapters 4.34 and 6.34 for information on passwords.

www.sendsms.cn

4.31.1 What to do if PIN or password authentication fails?

PIN1 / PUK1: After three failures to enter PIN 1, the SIM card is blocked (except for emergency calls). To unblock the SIM card, the client needs to enter the associated PUK (= PIN Unblocking Key / Personal Unblocking Key). After ten failed attempts to enter the PUK, the SIM card will be invalidated and no longer operable. In such a case, the card needs to be replaced.
To unblock a disabled PIN1, use the AT+CPIN command and enter the PUK when prompted by the response +CME ERROR: 12. Alternatively, you can use the ATD command followed by the GSM code **05*PUK*newPIN*newPIN#.

PIN2 / PUK2: PIN2 prevents unauthorized access to the features listed in Chapter 4.32. The handling of PIN2 varies with the provider. PIN2 may either be a specific code supplied along with an associated PUK2, or a default code such as 0000. In either case, the client is advised to replace it with an individual code. Incorrect input of PUK2 will permanently block the additional features subject to PIN2 authentification, but usually has no affect on PIN1.
To unblock a disabled PIN2, use the AT+CPIN command and enter the PUK2 when prompted by the response +CPIN: SIM PUK2 or after the equivalent error code: +CME ERROR: 18 was returned. Alternatively, you can use the ATD command followed by the GSM code **052*PUK*newPIN*newPIN#.

www.sendsms.cn

Phone lock: If the mobile was locked to a specific SIM card (= "PS" lock or phone lock), the PUK that came with the SIM card cannot be used to remove the lock. After three failed attempts to enter the correct password, ME returns +CPIN: PH-SIM PUK, i.e. it is now waiting for the Master Phone Code. This is an 8-digit device code associated to the IMEI number of the mobile which can only by obtained from the manufacturer or provider. When needed, contact Siemens AG and request the Master Phone Code of the specific module.
Please note that, in contrast to Siemens mobile phones, the GSM engines do not support the option of sending the Master Phone Code with ATD and a *#0003*<number># GSM code. Therefore, enter the Master Phone Code when prompted after input of AT+CPIN. For instructions see the examples provided in Chapter 4.18.2).
As an alternative, you can use the AT+CPWD command and specify a new password for <fac>="PS". To do so, enter the Master Phone Code for <oldpwd> followed by <newpwd>, where <newpwd> may be the former disabled "PS" password or a new one (see examples in Chapters 4.18.2 and 4.34).
Usually, the Master Phone Code will be supplied by mail or e-mail. If the received number is enclosed in the *# codes typically used for mobile phones, it is important to crop the preceding *#0003* characters and the appended #.

> Example: You may be given the string *#0003*12345678#. When prompted for the PH-SIM PUK simply enter 12345678.

If incorrectly input, the Master Phone Code is governed by a specific timing algorithm: (n-1)*256 seconds (see table below). The timing should be considered by system integrators when designing an individual MMI.

Table 8: Timing algorithm of icorrect password input

Number of failed attempts	Time to wait before next input is allowed
1st failed attempt	No time to wait
2nd failed attempt	4 seconds
3rd failed attempt	16 seconds
4th failed attempt	3 * 256 seconds
5th failed attempt	4 * 256 seconds
6th failed attempt and so forth	5 * 256 seconds and so forth

SIM locks: These are factory set locks, such as "PF", "PN", "PU", "PP", "PC". An 8-digit unlocking code is required to operate the mobile with a different SIM card, or to lift the lock. The code can only be obtained from the provider.

Failure to enter the password is subject to the same timing algorithm as the Master Phone Code (see Table 8).

Call barring: Supported modes are "AO", "OI", "OX", "AI", "IR", "AB", "AG", "AC". If the call barring password is entered incorrectly three times, the client will need to contact the service provider to obtain a new one.

Summary of related chapters: Related +CME errors are listed in Chapter 7.1.1. For further instructions and examples see Chapters 4.18 (AT+CLCK Facility lock), 6.13 (AT^SLCK Facility lock, 4.34 (AT+CPWD Change password) and 6.34 (AT^SPWD Change password for a lock. A complete list of **# codes is provided in Chapter 7.4.

www.sendsms.cn

4.32 AT+CPIN2 Enter PIN2

Test command AT+CPIN2=?	Response **OK**
Read command AT+CPIN2?	Response TA returns an alphanumeric string indicating whether some password is required or not. **+CPIN2: <code> OK** If error is related to ME functionality: **+CME ERROR: <err>** Parameter **<code>** READY — ME is not pending for any password SIM PIN2 — ME is waiting for SIM PIN2. This **<code>** is returned only when PIN2 authentication has not yet been done or has failed (+CME ERROR:17). SIM PUK2 — ME is waiting for SIM PUK2. This **<code>** is returned only when PIN2 authentication has failed and ME is pending for SIM PUK2 (i.e. +CME ERROR:18).
Write command AT+CPIN2=<pin>[,<new pin>]	Response The write command lets the ME store the entered password. This may be for example the SIM PIN2 to benefit from the features listed below, or the SIM PUK2 to replace a disabled PIN2 with a new one. Note that PIN2 can only be entered if PIN1 authentication was done. **OK** If error is related to ME functionality: **+CME ERROR: <err>** If the ME is requesting SIM PUK2, use <pin> to enter the PUK2, followed by <newpin> to specify your new PIN2. Parameter **<pin>** password (string type), usually SIM PIN2 or, if requested, SIM PUK2 **<new pin>** if the requested code was SIM PUK2: new password (PIN2). See Chapter 4.31.1 for more information about when you may need to enter the PUK.
Reference	Note Functions accessible only after PIN2 authentication: • AT+CACM: Accumulated call meter (ACM) reset or query • AT+CAMM: Accumulated call meter maximum (ACMmax) set or query • AT+CLCK: Facility lock to "FD" (Fixed dialling phonebook) • AT^SLCK: Facility lock to "FD" (Fixed dialling phonebook) • AT+CPWD: Change "P2"password • AT^SPWD: Change "P2"password • AT+CPUC: Price per unit and currency table • AT+CPIN2: Enter SIM PIN2 or SIM PUK2 if requested. For example, SIM PIN2 will be needed when you attempt to edit the "FD" phonebook and ME returns +CME Error 17 or +CPIN: SIM PIN2.

www.sendsms.cn

	Note that the PIN2 authentication remains active for 300s. This means, for example, that PIN2 will be requested once again, when you try to edit the "FD" phonebook later than 300s after PIN2 authentication has been done.
Example 1	To change PIN2: `AT+CPWD=P2,0000,8888` (where 0000 = old PIN2 and 8888 = new PIN2)

Example 2	To write to "FD" phonebook:
	`AT+CBPS="FD"`
	`OK`
	
	`AT+CPBW=2,"+493012345678",145,"Charly"`
	`+CME Error 17` (access denied due to missing PIN2 authentication)
	
	`AT+CPIN2=8888`
	`OK`
	
	`AT+CPBW=2,"+493012345678",145,"Charly"`
	`OK`

Example 3	To change price per unit: `AT+CPUC="dm","5",8888`

www.sendsms.cn

4.33 AT+CPUC Price per unit and currency table

Test command AT+CPUC=?	Response **OK**
Read command AT+CPUC?	Response Read command returns the current parameters of PUC. **+CPUC: <currency>, <ppu> OK** If error is related to ME functionality: **+CME ERROR: <err>** Parameter See write command
Write command AT+CPUC=<currency>,<ppu>[,<passwd>]	Response Write command sets the parameters of Advice of Charge related price per unit and currency table. SIM PIN2 is usually required to set the parameters. If error is related to ME functionality: **+CME ERROR: <err>** Parameter **<currency>** string type; three-character currency code (e.g. “GBP”, “DEM”); character set as specified with AT+CSCS. If the currency name is longer than three characters, all characters will be cut off after the third position. Before they are written to the SIM Card, these characters are converted to the standard GSM alphabet. **<ppu>** string type; price per unit; dot is used as a decimal separator (e.g. “2.66”). The length is limited to 20 characters. If the string length is exceeded, the command is terminated with an error. This string may only contain digits and a dot. Leading zeros are removed from the string. The minimum and maximum value are determined by the structure of the SIM-PUCT file. The maximum price per unit value is 999 999 999.00. When successfully entered, this value is rounded to maximum accuracy. Note: Due to storage in mantisse (range 0-4095) and exponent (-7 to 7) it is possible that rounding errors occur. **<passwd>** string type; SIM PIN2. String parameter which can contain any combination of characters. The maximum string length is limited to 8 characters. If this value is exceeded, the command terminates with an error message. If the PIN2 is incorrect, a CME error **(+CME ERROR: incorrect password)** is output.
Reference GSM 07.07	Note

www.sendsms.cn

4.34 AT+CPWD Change password

Use this command when you want to
- change PIN1 or PIN2
- change the password supplied from your provider for call barring
- set individual phone security passwords

See Chapters 4.18 and 6.13 for more information on the various lock features. The AT^SPWD command is a Siemens defined command equivalent to AT+CPWD. See Chapter 6.34.

Test command	Response
AT+CPWD=?	TA returns a list of pairs which represent the available facilities and the maximum length of the associated password. **+CPWD:** (list of supported **(**<**fac**>**,** <**pwdlength**>**)s**) **OK** If error is related to ME functionality: **+CME ERROR:** <**err**> Parameter <**fac**> see execute command <**pwdlength**> integer max. length of password
Execute command	Response
AT+CPWD = <fac>, [<oldpwd>], <newpwd>	TA sets a new password for the facility lock function. **OK** If error is related to ME functionality: **+CME ERROR:** <**err**> Parameter <**fac**> Phone security locks set by manufacturer or client: "SC" SIM (lock SIM card). SIM asks SIM PIN1 when ME is switched on and when this lock command is issued. "P2" SIM PIN2. Used to access the functions listed in Chapter 4.32. "PS" Phone locked to SIM (device code). The "PS" password may either be individually specified by the client or, depending on the subscription, supplied from the provider (e.g. with a prepaid mobile). Note: Each, SIM PIN1 and SIM PIN2 are assigned a PUK to unblock a disabled PIN. The "PS" password, however, is never associated with a PUK. If it is incorrectly entered three times, the Master Phone Code is required. See Chapter 4.31.1 Locks set by the manufacturer: "PF" lock Phone to the very first SIM card "PN" Network Personalisation "PU" Network-subset Personalisation "PP" Service-Provider Personalisation "PC" Corporate Personalisation Note: Typical examples of factory set locks are prepaid phones or network locks (e.g. if the operation of a mobile is restricted to a specific provider or operator). The locks can only be set by the manufacturer and need to be agreed upon between the parties con-

www.sendsms.cn

	cerned, e.g. provider, operator, distributor etc. on the one side and the manufacturer on the other side. For details contact your local dealer or Siemens AG. The client should be aware that each of these lock types can only be unlocked if the associated password is available. See Chapter 4.31 and 4.31.1 for further instructions. Supplementary Service: Call barring "AO" BAOC (Bar All Outgoing Calls) "OI" BOIC (Bar Outgoing International Calls) "OX" BOIC-exHC (Bar Outgoing International Calls except to Home Country) "AI" BAIC (Bar All Incoming Calls) "IR" BIC-Roam (Bar Incoming Calls when Roaming outside the home country) "AB" All Barring services (applicable only for <mode> = 0) "AG" All outGoing barring services (applicable only for <mode> = 0) "AC" All inComing barring services (applicable only for <mode> = 0) Note: The availability of the Supplementary Services varies with the network. To benefit from call barring the client will need to subscribe them, though a limited number of call barring types may be included in the basic tariff package. Call barring is protected by a password supplied from the provider or operator. Usually there is one password which applies to all call barring options. For details contact your provider. <**oldpwd**> password specified for the facility. Can be ignored if no old password was allocated to the facility. Take into account that a password may have already been set by factory, or that the service is subject to a password issued by the provider. See notes above or contact provider. if <fac> = "SC" then PIN if <fac> = "AO"..."AC" (barring) then network password (if needed) if <fac> = "P2" then PIN2 if <fac> = "PS" then password <**newpwd**> new password To delete a password use the following syntax: **at+cpwd=<fac>,<oldpwd>**
Reference GSM 07.07	Note CAUTION: After three attempts to enter a false PIN you will be prompted to enter the PUK. Failure to enter the PUK will permanently diasble the SIM card. See Chapter 4.31.1 for more information.
Example 1	To change PIN2: `AT+CPWD=P2,0000,8888` (where 0000 = old PIN2 and 8888 = new PIN2)
Example 2	To set password used to enable or disable barring of all outgoing calls: `AT+CPWD=ao,0000,3333`

www.siemens.cn

Example 3	To change the "PS" lock password, using the correct old password: `AT+CPWD=PS,1111,2222` (where 1111 = old "PS" password and 2222 = new password) To specify a new "PS" lock password, after the old password was disabled, e.g. after three failed attempts to enter the password (only if Master Phone Code is availbale): `AT+CPWD=PS,12345678,1111` (where 12345678 is the Master Phone code and 1111 is the new password. You may also use <newpwd> to restore the former disabled password). This operation deactivates the present phone lock and sets a new one. See also Chapter 4.31.1. Alternatively, whithout giving a new password: `AT+CPWD=PS,12345678` Deactivates the present phone lock.

4.35 AT+CR Service reporting control

Test command AT+CR=?	Response +**CR**: (list of supported <**mode**>s) **OK** Parameter See write command
Read command AT+CR?	Response +**CR:** <**mode**> **OK** Parameter See write command
Write command AT+CR=<mode>	Response Configures the TA whether or not to transmit an intermediate result code +**CR:** <**serv**> to TE when a call is being set up. **OK** Parameter <**mode**> 0 disable 1 enable
	Intermediate result code If enabled, an intermediate result code is transmitted at the point during connect negotiation when the TA has determined the speed and quality of service to be used, before any error control or data compression reports are transmitted, and before any final result code (e.g. CONNECT) appears. +**CR:**<**serv**> Parameter <**serv**> REL ASYNC asynchronous non-transparent
Reference GSM 07.07	Note The PLMN influences the second air interface (to the terminator), therefore another mode may be established from the network

www.sendsms.cn

4.36 AT+CRC Set Cellular Result Codes for incoming call indication

Test command AT+CRC=?	Response **+CRC:** (list of supported <**mode**>s) **OK** Parameter See write command
Read command AT+CRC?	Response **+CRC:** <**mode**> **OK** Parameter See write command
Write command AT+CRC= [<mode>]	Response Specifies whether or not to use the extended format of incoming call indication. **OK** Parameters <**mode**> 0 disable extended format 1 enable extended format
	Unsolicited result code If enabled, the unsolicited result code **+CRING:** <**type**> replaces the normal RING code to indicate the incoming call and the type of the call. Parameter <**type**> REL ASYNC asynchronous non-transparent FAX facsimile VOICE voice
Reference GSM 07.07	Note

www.sendsms.cn

4.37 AT+CREG Network registration

Test command AT+CREG=?	Response **+CREG:** (list of supported <**n**>s) **OK** Parameter See write command
Read command AT+CREG?	ME returns the URC presentation mode <n> and an integer <stat> that shows the registration status of the ME. The location information elements <lac> and <ci> are returned only when <n>=2 and ME is registered to the network. Response **+CREG: <n>,<stat>[,<lac>,<ci>]** **OK** or if an error occurs which is related to ME functionality: **+CME ERROR: <err>** (for error text see Chapter 7.1.1. or set AT+CMEE=2)
Write command AT+CREG= [<n>]	Use the write command to select the type of URC. Two types of URCs are available: **+CREG: <stat>** if **<n>**=1. To be issued when the ME's network registration status changes or **+CREG: <stat>[,<lac>,<ci>]** if **<n>**=2. To be issued when ME's network registration or network cell changes. Response **OK** or if an error occurs which is related to ME functionality: **+CME ERROR: <err>** **<err>** 256 If <n> = 0: Attempt to set once again <n>=0 causes error code 256. If <n> > 0: Attempt to activate a URC mode that is already active is acknowledged with OK. Parameter **<n>** 0 disable URCs 1 enable URC **+CREG:<stat>** to report status of network registration 2 enable URC **+CREG:<stat>[,<lac>,<ci>]** to report status of network registration including location information. Please note that optional parameters will not be displayed during call. **<stat>** 0 not registered, ME is currently not searching for new operator 1 registered, home network 2 not registered, but ME is currently searching for a new operator 3 registration denied 4 unknown 5 registered, roaming **<lac>** string type; two byte location area code in hexadecimal format (e.g. "00C3" equals 193 in decimal) **<ci>** string type; two byte cell ID in hexadecimal format

www.sendsms.cn

	Unsolicited result code If **<n>=1** and there is a change in the ME network registration status: **+CREG: <stat>** If **<n>=2** and there is a change in the ME network registration status or a change of the network cell: **+CREG: <stat>[,<lac>,<ci>]**
Reference GSM 07.07	Note Optional parameters will not be displayed during a call.

Example	`AT+CREG=2`
	`OK`
	
	`AT+COPS=0`
	`OK`
	
	`+CREG: 2`
	`+CREG: 1,"0145","291A"`
	
	Activates extended URC mode.
	
	Forces ME to automatically search network operator.
	
	URC reports that ME is currently searching.
	URC reports that operator has been found.

www.sendsms.cn

4.38 AT+CRLP Select radio link protocol param. for orig. non-transparent data call

Test command AT+CRLP=?	Response TA returns values supported by the TA as a compound value. **+CRLP:** (list of supported <**iws**>**s**), (list of supported <**mws**>**s**), (list of supported <**T1**>**s**), (list of supported <**N2**>**s**) **OK** Parameter See write command
Read command AT+CRLP?	Response TA returns current settings for the supported RLP version 0. **+CRLP: <iws>,<mws>,<T1>,<N2>[,<verx>]** **OK** Parameter See write command
Write command AT+CRLP= [<iws> [,<mws> [,<T1> [,<N2 >]]]]	Response TA sets radio link protocol (RLP) parameters used when non-transparent data calls are originated. **OK** Parameter **<iws>** 0-61 Interworking window size (IWF to MS) **<mws>** 0-61 Mobile window size (MS to IWF) **<T1>** 48-78-255 Acknowledgement timer (T1 in 10 ms units) **<N2>** 1-6-255 Re-transmission attempts N2 **<verx>** 0 RLP version number in integer format; when version indication is not present it shall equal 0.
Reference GSM 07.07	Note • RLP version 0: single-link basic version; • RLP version 1: single-link extended version (e.g. extended by data compression); • RLP version 2: multi-link version. • Compression and multi-link are not supported.

www.sendsms.cn

4.39 AT+CRSM Restricted SIM access

Test command AT+CRSM=?	Response **OK**
Write command AT+CRSM=<command>[,<fileid>[,<P1>,<P2>,<P3>[,<data>]]]	Response By using this command instead of generic SIM Access TE application has easier but more limited access to the SIM database. As response to the command, ME sends the actual SIM information parameters and response data. **+CRSM: <sw1>, <sw2> [,<response>] OK** If error is related to ME functionality: **+CME ERROR: <err>** Parameter **<command>** 176 READ BINARY 178 READ RECORD 192 GET RESPONSE 214 UPDATE BINARY 220 UPDATE RECORD 242 STATUS all other values are reserved **<fileid>** integer type; this is the identifier for an elementary data file on SIM. Mandatory for every command except STATUS **<P1>,<P2>,<P3>** integer type; parameters passed on by the ME to the SIM **<data>** information which shall be written to the SIM (hexadecimal character format) **<sw1>, <sw2>** integer type; information from the SIM about the execution of the actual command. These parameters are delivered to the TE in both cases, on successful or failed execution of the command **<response>** response of a successful completion of the command previously issued (hexadecimal character format)
Reference GSM 07.07	Note

www.sendsms.cn

4.40 AT+CSCS Set TE character set

Test command AT+CSCS=?	Response **+CSCS**: (list of supported <**chset**>s) **OK**
Read command AT+CSCS?	Response **+CSCS: <chset>** **OK**
Write command AT+CSCS=[<chset>]	Response Write command informs TA which character set <**chset**> is used by the TE. TA is then able to convert character strings correctly between TE and ME character sets. **OK**
	Parameters **<chset>:** **"GSM"** GSM default alphabet (GSM 03.38 subclause 6.2.1); Note: This setting may cause software flow control problems due to values of XON/XOFF characters. **"UCS2"** 16-bit universal multiple-octet coded character set (ISO/IEC10646 [32]); UCS2 character strings are converted to hexadecimal numbers from 0000 to FFFF; e.g. "004100620063" equals three 16-bit characters with decimal values 65, 98 and 99, $(AT R97)$
Reference GSM 07.07	Note • Also see chapter „Supported character sets“, pg. 9. • When TA-TE interface is set to 8-bit operation and used TE alphabet is 7-bit, the highest bit will be set to zero.

www.siemens.cn

4.41 AT+CSNS Single Numbering Scheme

The AT+CSNS command enables the ME to accept incoming calls when no bearer capability information is provided with the call, e.g. single numbering scheme calls or calls originitating from analog devices.

The command must be set before the call comes. By default, when you do not modify the settings, all calls received without bearer element are assumed to be voice.

Please note that you can use the command if PIN authentication has been done during current session. The setting will be automatically saved when you power down the GSM engine with AT^SMSO.

Test command AT+CSNS=?	Response **+CSNS: (list of supported <mode>s)** **OK**
Read command AT+CSNS?	Response **+CSNS: <mode>** **OK**
Write command AT+CSNS=[<mode>]	Response Write command **OK** Parameters **<mode>:** 0 Voice — Each call received without bearer element is assumed to be speech. 2 Fax — Each call received without bearer element is assumed to be an incoming fax. 4 Data — Each call received without bearer element is assumed to be a data call. Please take into account that the bearer service parameters set with AT+CBST apply to all data calls including those received without bearer capability. To avoid conflicts see Chapter 4.5.
Reference GSM 07.07	Note

www.sendsms.cn

4.42 AT+CSQ Signal quality

Test command AT+CSQ=?	Response **+CSQ:** (list of supported <**rssi**>s), (list of supported <**ber**>) **OK** Parameter See execute command
Execute command AT+CSQ	Response TA returns received signal strength indication <**rssi**> and channel bit error rate <**ber**> from the ME. **+CSQ: <rssi>, <ber> OK** Parameter <**rssi**> Receive level: 0 -113 dBm or less 1 -111 dBm 2...30 -109... -53 dBm 31 -51 dBm or greater 99 not known or not detectable <**ber**> Bit error rate: To check the bit error rate there must be a call in progress. If no call is set up, the BER is unknown (= 99). 0...7 as RXQUAL values in the table in GSM 05.08 section 8.2.4. 99 not known or not detectable.
Reference GSM 07.07	Note

www.sendsms.cn

4.43 AT+CSSN Supplementary service notifications

Test command AT+CSSN=?	Response **+CSSN**: (list of supported <**n**>s), (list of supported <**m**>s)**OK** Parameter <**n**> 0 Suppresses the +CSSI messages 1 Activates the +CSSI messages <**m**> 0 Suppresses the +CSSU messages 1 Activates the +CSSU messages
Read command AT+CSSN?	Response **+CSSN:** <**n**>,<**m**>**OK** Parameter <**n**> See Test command <**m**> See Test command
Write command AT+CSSN=<n>[,<m>]	Response **OK** Parameter <**n**> See read command <**m**> See read command
	Unexpected message **+CSSI:** <**code1**> When <**n**>=**1** and a supplementary service notification is received after a mobile originated call setup, intermediate result code **+CSSI:** <**code1**> is sent to TE before any other MO call setup result codes **+CSSU:** <**code2**> When <**m**>=**1** and a supplementary service notification is received during a mobile terminated call setup or during a call, unsolicited result code **+CSSU: code2**>is sent to TE. Parameter <**code1**> Intermediate result code 3 Waiting call is pending <**code2**> Unsolicited result code 0 The incoming call is a forwarded call. 5 Held call was terminated
Reference GSM 07.07	Note

www.sendsms.cn

4.44 AT+CUSD Unstructured supplementary service data

Test command AT+CUSD=?	Response **+CUSD:** (list of supported <**n**>s) **OK** Parameter See write command
Read command AT+ CUSD?	Response TA returns the current <n> value. **+CUSD:** <**n**> **OK** If error is related to ME functionality: **+CME ERROR:** <**err**>
Write command AT+ CUSD= <n>[,<str>[,<dcs>]]	This command allows control of the Unstructured Supplementary Service Data (USSD) according to GSM 02.90. Both network and mobile initiated operations are supported. Parameter <**n**> is used to disable/enable the presentation of an unsolicited result code (USSD response from the network, or network initiated operation) +**CUSD:**<**m**>**[,**<**str**>**,**<**dcs**>**]** to the TE. When <**str**> is given, a mobile initiated USSD string or a response USSD string to a network initiated operation is sent to the network. The response USSD string from the network is returned in a subsequent unsolicited +**CUSD** result code. The interaction of this command with other commands based on other GSM supplementary services is described in the GSM standard. Parameter <**n**> 0 disable the result code presentation in the TA 1 enable the result code presentation in the TA 2 cancel session (not applicable to read command response) <**str**> string type USSD-string (when <str> parameter is not given, network is not interrogated). If <dcs> indicates that GSM 03.38 default alphabet is used ME/TA converts GSM alphabet into current TE character set according to rules of GSM 07.05 Annex A. <**dcs**> GSM 03.38 Cell Broadcast Data Coding Scheme in integer format (default 15) <**m**> 0 no further user action required (network initiated USSD-Notify, or no further information needed after mobile initiated operation) 1 further user action required (network initiated USSD-Request, or further information needed after mobile initiated operation) 2 USSD terminated by network Response **OK** If error is related to ME functionality: **+CME ERROR:** <**err**>
Reference GSM 07.07	Note • For the write command <**dcs**>=15 is supported only. • On an unsolicited result code with parameter <**m**>=1 a '> ' is given for further user action. The user action is finished with a <ctrl-Z> or aborted with <ESC>.

www.sendsms.cn

4.45 AT+VTD=<n> Tone duration

Test command AT+VTD=?	This command refers to an integer <**duration**> that defines the length of tones emitted as a result of the +VTS command. Response +**VTD** (list of supported <duration>s) **OK** Parameter See write command
Read command AT+VTD?	Response <**duration**> **OK** Parameter See write command
Write command AT+VTD= <duration>	Response **OK** Parameter <**duration**> 1 – 255 duration of the tone in 1/10 second
Reference GSM 07.07	Note

www.sendsms.cn

4.46 AT+VTS DTMF and tone generation (<Tone> in {0-9, *, #, A, B, C, D})

Test command AT+VTS=?	Response **+VTS:** (list of supported <**dtmf**>**s**)[, (list of supported <**duration**>**s**)] **OK** Parameter See write command
Write command 1. AT+VTS=<dtmf-string> 2. AT+VTS=<dtmf>,<duration>	Response This command allows the transmission of DTMF tones and arbitrary tones in voice mode. These tones may be used (for example) when announcing the start of a recording period. • This is interpreted as a sequence of DTMF tones whose duration is set with the +VTD command. • This is interpreted as a DTMF tone whose duration is determined by <duration>. **OK** If error is related to ME functionality: **+CME ERROR: <err>** Parameter <**dtmfstring**> String of ASCII characters in the set 0-9,#,*,A, B, C, D. Maximal length of the string is 29. The string has to be entered between double-quote characters (””). <**dtmf**> ASCII character in the set 0-9,#,*, A, B, C, D. <**duration**> 1-255 duration of a tone in 1/10 second
Reference GSM 07.07	Note This command only works during active voice call

www.sendsms.cn

4.47 AT+WS46 Select wireless network

Test command AT+WS46=?	Response (list of supported <**n**>s) **OK**
Read command AT+WS46?	Response <**n**> **OK/ERROR/+CME ERROR**
	Parameter <**n**> 12 GSM digital cellular
Write command AT+WS46=[<n>]	Response **OK/ERROR/+CME ERROR**
Reference GSM 07.07	Note

www.sendsms.cn

5 AT commands originating from GSM 07.05 for SMS

The SMS related AT Commands are according to the GSM 07.05 specification issued by ETSI (European Telecommunications Standards Institute).

5.1 AT+CMGC Send an SMS command

Test command AT+CMGC=?	Response **OK**

Write command
if text mode (AT+CMGF=1):
AT+CMGC=<fo>,<ct>[,<pid>[,<mn>[,<da>[,<toda>]]]]<CR>
text is entered <ctrl-Z/ESC>
	Response
	if text mode (+CMGF=1) and sending successful:
	+CMGC: <mr>[,<scts>]
	if sending fails:
	+CMS ERROR: <err>

Write command
if PDU mode (AT+CMGF=0):
AT+CMGC=<length><CR>
PDU is given <ctrl-Z/ESC>
+CMGC=?
	Response
	if PDU mode (+CMGF=0) and sending successful:
	+CMGC: <mr>[,<ackpdu>]
	if sending fails:
	+CMS ERROR: <err>
	
	Parameter
	<length>Length of PDU
	<pdu> See ”AT+CMGL”
	<mr> Message reference
	<fo> depending on the command or result code: first octet of GSM 03.40 SMS-DELIVER, SMS-SUBMIT (default 17), SMS- STATUS-REPORT, or SMS -COMMAND (default 2) in integer format
	<ct> GSM 03.40 TP-Command-Type in integer format (default 0)
	<pid> GSM 03.40 TP-Protocol-Identifier in integer format (default 0)
	<toda> GSM 04.11 TP-Destination-Address Type-of-Address octet in integer format (when first character of **<da>** is + (IRA 43) default is **145**, otherwise default is **129**)
	<da> GSM 03.40 TP-Destination-Address Address-Value field in string format; BCD numbers (or GSM default alphabet characters) are converted into characters; type of address given by **<toda>**
	<scts> GSM 03.40 TP-Service-Centre-Time-Stamp in time-string format (refer to **<dt>**)

Reference GSM 07.05	Note • After invoking the commands CMGW, CMGS or CMGC it is necessary to wait for the ">" symbol before entering text or PDU. • At baudrates below 19200 it is recommended to use the line termination character only (refer to +ATS3, default <CR>, pg. 23) before entering the text/pdu. Use of the line termination character followed by the response formating character (refer to +ATS4, default <LF>, pg. 23) can cause problems.

www.sendsms.cn

5.2 AT+CMGD Delete SMS message

Test command AT+CMGD=?	Response **OK** Parameter
Execute command AT+CMGD= <index>	Response TA deletes message from preferred message storage <**mem1**> location <**index**>. **OK** If error is related to ME functionality: **+CMS ERROR <err>** Parameter <**index**> integer type; value in the range of location numbers supported by the associated memory
Reference GSM 07.05	Note If there is no SMS stored at the selected index, the response is OK too.

www.sendsms.cn

5.3 AT+CMGF Select SMS message format

Test command AT+CMGF=?	Response **+CMGF**: (list of supported <**mode**>**s**) **OK** Parameter See write command
Read command AT+CMGF?	Response **+CMGF: <mode> OK** Parameter See write command
Write command AT+CMGF = [<mode>]	Response TA sets parameter which specifies the input and output format of messages to be used. **OK** Parameter <**mode**> 0 PDU mode 1 text mode
Reference GSM 07.05	Note

5.4 AT+CMGL List SMS messages from preferred store

Test command AT+CMGL=?	Response **+CMGL:** (list of supported <**stat**>**s**) **OK** Parameter See execute command
Execute command AT+CMGL[= <stat>]	Parameter 1) If text mode: <**stat**> "REC UNREAD" Received unread messages (default) "REC READ" Received read messages "STO UNSENT" Stored unsent messages "STO SENT" Stored sent messages "ALL" All messages 2) If PDU mode: <**stat**> 0 Received unread messages (default) 1 Received read messages 2 Stored unsent messages 3 Stored sent messages 4 All messages Response TA returns messages with status value <stat> from message storage <**mem1**> to the TE. If status of the message is 'received unread', status in the storage changes to 'received read'. Note: If the selected <**mem1**> can contain different types of SMs (e.g. SMS-DELIVERs, SMS- SUBMITs, SMS- STATUS-REPORTs and SMS-COMMANDs), the response may be a mix of the responses of different SM types. TE application can recognize the response format by examining the third response parameter.
	Response 1) If text mode (+CMGF=1) and command successful: for SMS- SUBMITs and/or SMS-DELIVERs: **+CMGL: <index>,<stat>,<oa/da>,[<alpha>],[<scts>][,<tooa/toda>, <length>]<CR><LF><data>[<CR><LF>** **+CMGL: <index>,<stat>,<da/oa>,[<alpha>],[<scts>][,<tooa/toda>, <length>]<CR><LF><data>[...]] OK** for SMS-STATUS-REPORTs: **+CMGL: <index>,<stat>,<fo>,<mr>,[<ra>],[<tora>],<scts>,<dt>,<st> [<CR><LF>** **+CMGL: <index>,<stat>,<fo>,<mr>,[<ra>],[<tora>],<scts>,<dt>,<st> [...]] OK**

www.sendsms.cn

for SMS-COMMANDs:
+CMGL: <index>,<stat>,<fo>,<ct>[<CR><LF>
+CMGL: <index>,<stat>,<fo>,<ct>[...]] OK

for CBM storage:
+CMGL: <index>,<stat>,<sn>,<mid>,<page>,<pages><CR><LF><data>[<CR><LF>
+CMGL: <index>,<stat>,<sn>,<mid>,<page>,<pages>
<CR><LF><data>[...]]OK

2) If PDU mode (+CMGF=0) and command successful:
+CMGL: <index>,<stat>,[<alpha>],<length><CR><LF><pdu>
[<CR><LF>+CMGL: <index>,<stat>,[alpha],<length><CR><LF><pdu>
[...]] OK

for CBM storage:
+CMGL: <index>,<length><CR><LF><pdu>

3) If error is related to ME functionality:
+CMS ERROR: <err>

www.sendsms.cn

Parameter

<**alpha**> string type alphanumeric representation of <da> or <oa> corresponding to the entry found in phonebook; implementation of this feature is manufacturer- specific

<**ct**> GSM 03.40 TP-Command-Type in integer format (default 0)

<**da**> GSM 03.40 TP-Destination-Address Address-Value field in string format; BCD numbers (or GSM default alphabet characters) are converted into characters; type of address given by <**toda**>

<**data**>
In case of SMS: GSM 03.40 TP-User-Data in text mode responses; format:

- if <**dcs**> indicates that GSM 03.38 default alphabet is used and <fo> indicates that GSM 03.40 TP-User-Data-Header-Indication is not set: ME/TA converts GSM alphabet into current TE character set according to rules of Annex A
- if <**dcs**> indicates that 8-bit or UCS2 data coding scheme is used, or <fo> indicates that GSM 03.40 TP-User-Data-Header-Indication is set: ME/TA converts each 8-bit octet into hexadecimal numbers containing two IRA characters (e.g. octet with integer value 42 is presented to TE as two characters 2A (IRA 50 and 65))

In the case of CBS: GSM 03.41 CBM Content of Message in text mode responses; format:

- if <**dcs**>indicates that GSM 03.38 default alphabet is used: ME/TA converts GSM alphabet into current TE character set according to rules of Annex A
- if <**dcs**> indicates that 8-bit or UCS2 data coding scheme is used: ME/TA converts each 8-bit octet into hexadecimal numbers containing two IRA characters

	Parameter
	<dt> GSM 03.40 TP-Discharge-Time in time-string format: “yy/MM/dd,hh:mm:ss±zz”, where characters indicate year (two last digits), month, day, hour, minutes, seconds and time zone. For example, 6th of May 1994, 22:10:00 GMT+2 hours equals “94/05/06,22:10:00+08”
	<fo> depending on the command or result code: first octet of GSM 03.40 SMS-DELIVER, SMS-SUBMIT (default 17), SMS- STATUS-REPORT, or SMS -COMMAND (default 2) in integer format
	<length> integer type value indicating in the text mode (+CMGF=1) the length of the message body <data> (or <cdata>) in characters; or in PDU mode (+CMGF=0), the length of the actual TP data unit in octets (i.e. the RP layer SMSC address octets are not counted in the length)
	<index> integer type; value in the range of location numbers supported by the associated memory
	<mid> GSM 03.41 CBM Message Identifier in integer format
	<mr> GSM 03.40 TP-Message-Reference in integer format
	<oa> GSM 03.40 TP-Originating-Address Address-Value field in string format; BCD numbers (or GSM default alphabet characters) are converted into characters; type of address given by <tooa>
	<pages> GSM 03.41 CBM Page Parameter bits 0-3 in integer format
	<pdu> In the case of SMS: GSM 04.11 SC address followed by GSM 03.40 TPDU in hexadecimal format: ME/TA converts each octet of TP data unit into hexadecimal numbers containing two IRA characters (e.g. octet with integer value 42 is presented to TE as two characters 2A (IRA 50 and 65)). In the case of CBS: GSM 03.41 TPDU in hexa-decimal format.
	<page> GSM 03.41 CBM Page Parameter bits 4-7 in integer format
	<ra> GSM 03.40 TP-Recipient-Address Address-Value field in string format; BCD numbers (or GSM default alphabet characters) are converted into characters; type of address given by <tora>
	<scts> GSM 03.40 TP- Service-Centre-Time-Stamp in time-string format (refer <dt>)
	<sn> GSM 03.41 CBM Serial Number in integer format
	<st> GSM 03.40 TP-Status in integer format
	<toda> GSM 04.11 TP-Destination-Address Type-of-Address octet in integer format (when first character of <da> is + (IRA 43) default is 145, otherwise default is 129)
	<tooa> GSM 04.11 TP-Originating-Address Type-of-Address octet in integer format (default refer<toda>)
	<tora> GSM 04.11 TP-Recipient-Address Type-of-Address octet in integer format (default refer<toda>)
Reference GSM 07.05	Note

www.sendsms.cn

5.5 AT+CMGR Read SMS message

Test command AT+CMGR=?	Response OK
Execute command AT+CMGR= <index>	Parameter <**index**> integer type; value in the range of location numbers supported by the associated memory Response TA returns SMS message with location value <index> from message storage <mem1> to the TE. If status of the message is 'received unread', status in the storage changes to 'received read'. 1) If text mode (+CMGF=1) and command successful: for SMS-DELIVER: **+CMGR: <stat>,<oa>,[<alpha>],<scts> [,<tooa>,<fo>,<pid>,<dcs>, <sca>,<tosca>,<length>]<CR><LF><data>** for SMS-SUBMIT: **+CMGR: <stat>,<da>,[<alpha>] [,<toda>,<fo>,<pid>,<dcs>,[<vp>], <sca>,<tosca>,<length>]<CR><LF><data>** for SMS-STATUS-REPORT: **+CMGR: <stat>,<fo>,<mr>,[<ra>],[<tora>],<scts>,<dt>,<st>** for SMS- COMMAND: **+CMGR: <stat>,<fo>,<ct> [,<pid>,[<mn>],[<da>],[<toda>],<length> <CR><LF><cdata>]** for CBM storage: **+CMGR: <stat>,<sn>,<mid>,<dcs>,<page>,<pages><CR><LF><data>** 2) If PDU mode (+CMGF=0) and command successful: **+CMGR: <stat>,[<alpha>],<length><CR><LF><pdu> OK** for CBM storage: +CMGR: <length><CR><LF><pdu> 3)If error is related to ME functionality: **+CMS ERROR: <err>** Parameter <**alpha**> string type alphanumeric representation of <**da**> or <**oa**> corresponding to the entry found in phonebook; implementation of this feature is manufacturer specific <**stat**> integer type in PDU mode (default 0), or string type in text mode (default "REC UNREAD"); indicates the status of message in memory: defined values:

www.sendsms.cn

0 "REC UNREAD" received unread message (i.e. new message)
1 "REC READ" received read message
2 "STO UNSENT" stored unsent message (only applicable to SMs)
3 "STO SENT" stored sent message (only applicable to SMs)

<**ct**> GSM 03.40 TP-Command-Type in integer format (default 0)

<**da**> GSM 03.40 TP- Destination-Address Address-Value field in string format; BCD numbers (or GSM default alphabet characters) are converted into characters; type of address given by <**toda**>

<**data**>

In case of SMS: GSM 03.40 TP-User-Data in text mode responses; format:

-if <**dcs**> indicates that GSM 03.38 default alphabet is used and <fo> indicates that GSM 03.40 TP-User-Data-Header-Indication is not set: ME/TA converts GSM alphabet into current TE character set according to rules covered in Annex A

-if <**dcs**> indicates that 8-bit or UCS2 data coding scheme is used, or <fo> indicates that GSM 03.40 TP-User-Data-Header-Indication is set: ME/TA converts each 8-bit octet into hexadecimal numbers containing two IRA characters (e.g. octet with integer value 42 is presented to TE as two characters 2A (IRA 50 and 65)

In case of CBS: GSM 03.41 CBM Content of Message in text mode responses; format:

- if <**dcs**> indicates that GSM 03.38 default alphabet is used: ME/TA converts GSM alphabet into current TE character set according to rules covered in Annex A

-if <**dcs**> indicates that 8-bit or UCS2 data coding scheme is used: ME/TA converts each 8-bit octet into hexadecimal numbers containing two IRA characters

<**dcs**> depending on the command or result code: GSM 03.38 SMS Data Coding Scheme (default 0), or Cell Broadcast Data Coding Scheme in integer format

<**cdata**> GSM 03.40 TP-Command-Data in text mode responses; ME/TA converts each 8-bit octet into two IRA character long hexadecimal numbers (e.g. octet with integer value 42 is presented to TE as two characters 2A (IRA 50 and 65))

<**dt**> GSM 03.40 TP-Discharge-Time in time-string format: "yy/MM/dd,hh:mm:ss±zz", where characters indicate year (two last digits), month, day, hour, minutes, seconds and time zone. For example, 6th of May 1994, 22:10:00 GMT+2 hours equals "94/05/06,22:10:00+08"

<**fo**> depending on the command or result code: first octet of GSM 03.40 SMS- DELIVER, SMS-SUBMIT (default 17), SMS-STATUS-REPORT, or SMS-COMMAND (default 2) in integer format

<**length**> integer type value indicating in text mode (+CMGF=1) the length of the message body <data> (or <cdata>) in characters; or in PDU mode (+CMGF=0), the length of the actual TP data unit in octets (i.e. the RP layer SMSC address octets are not counted in the length).

In text mode, the maximum length of an SMS depends on the used coding scheme: It is **160** characters if the 7 bit GSM coding scheme is

www.sendsms.cn

		used, and **140** characters according to the 8 bit GSM coding scheme.
	<index>	integer type; value in the range of location numbers supported by the associated memory
	<mid>	GSM 03.41 CBM Message Identifier in integer format
	<mr>	GSM 03.40 TP-Message-Reference in integer format
	<oa>	GSM 03.40 TP-Originating-Address Address-Value field in string format; BCD numbers (or GSM default alphabet characters) are converted into characters; type of address given by <tooa>
	<page>	GSM 03.41 CBM Page Parameter bits 4-7 in integer format
	<pages>	GSM 03.41 CBM Page Parameter bits 0-3 in integer format
	<pdu>	In the case of SMS: GSM 04.11 SC address followed by GSM 03.40 TPDU in hexadecimal format: ME/TA converts each octet of TP data unit into hexadecimal numbers containing two IRA characters (e.g. octet with integer value 42 is presented to TE as two characters 2A (IRA 50 and 65)). In the case of CBS: <ra> GSM 03.40 TP-Recipient-Address Address-Value field in string format; BCD numbers (or GSM default alphabet characters) are converted into characters; type of address given by **<tora>**
	<pid>	GSM 03.40 TP-Protocol-Identifier in integer format (default 0)
	<ra>	GSM 03.40 TP-Recipient-Address Address-Value field in string format; BCD numbers (or GSM default alphabet characters) are converted to characters of the currently selected TE character set (refer command AT+CSCS Select TE character set.); type of address given by <tora>
	<sca>	GSM 04.11 RP SC address Address-Value field in string format; BCD numbers (or GSM default alphabet characters) are converted to characters of the currently selected TE character set (refer command AT+CSCS Select TE character set); type of address given by `<tosca>`
	<scts>	GSM 03.40 TP-Service-Centre-Time-Stamp in time-string format (refer <dt>)
	<sn>	GSM 03.41 CBM Serial Number in integer format
	<st>	GSM 03.40 TP-Status in integer format
	<toda>	GSM 04.11 TP-Destination-Address Type-of-Address octet in integer format (when first character of <da> is + (IRA 43) default is 145, otherwise default is 129)
	<tooa>	GSM 04.11 TP-Originating-Address Type-of-Address octet in integer format (default refer<toda>)
	<tora>	GSM 04.11 TP-Recipient-Address Type-of-Address octet in integer format (default refer<toda>)
	<tosca>	GSM 04.11 RP SC address Type-of-Address octet in integer format (default refer <toda>)
	<vp>	depending on SMS-SUBMIT <fo> setting: GSM 03.40 TP-Validity-Period either in integer format (default 167) or in time-string format (refer <dt>)
Reference	Note	
GSM 07.05	Response to a CMGR to an empty record index: +CMGR: 0,,0 Response to a CMGR to a not existing record index: +CMS ERROR: invalid memory index	

www.seemens.cn

5.6 AT+CMGS Send SMS message

Test command AT+CMGS=?	Response **OK** Parameter
Execute command 1) If text mode (+CMGF=1): +CMGS=<da>[,<toda>]<CR> text is entered <ctrl-Z/ESC> 2) If PDU mode (+CMGF=0): +CMGS=<length><CR> PDU is given <ctrl-Z/ESC> ESC aborts message	Response TA transmits SMS message from TE to network (SMS-SUBMIT). Message reference value <**mr**> is returned to TE on successful message delivery. Value can be used to identify message upon unsolicited delivery status report result code. 1) If text mode (+CMGF=1) and sending successful: **+CMGS: <mr>[,scts>] OK** 2) If PDU mode (+CMGF=0) and sending successful: **+CMGS: <mr>[,ackpdu>] OK** 3) If error is related to ME functionality: **+CMS ERROR: <err>** Parameter **<da>** GSM 03.40 TP-Destination-Address Address-Value field in string format; BCD numbers (or GSM default alphabet characters) are converted into characters; type of address given by **<toda>** **<toda>** GSM 04.11 TP-Destination-Address Type-of-Address octet in integer format (when first character of **<da>** is + (IRA 43) default is **145**, otherwise default is **129**) **<length>** integer type value indicating in text mode (+CMGF=1) the length of the message body **<data>** (or **<cdata>**) in characters; or in PDU mode (+CMGF=0), the length of the actual TP data unit in octets (i.e. the RP layer SMSC address octets are not counted in the length) In text mode, the maximum length of an SMS depends on the used coding scheme: It is **160** characters if the 7 bit GSM coding scheme is used, and **140** characters according to the 8 bit GSM coding scheme. **<mr>** GSM 03.40 TP-Message-Reference in integer format **<scts>** GSM 03.40 TP-Service-Centre-Time-Stamp in time-string format (refer **<dt>**) **<dt>** GSM 03.40 TP-Discharge-Time in time-string format: “yy/MM/dd,hh:mm:ss±zz”, where characters indicate year (two last digits), month, day, hour, minutes, seconds and time zone. For example, 6th of May 1994, 22:10:00 GMT+2 hours equals “94/05/06,22:10:00+08” **<ackpdu>** GSM 03.40 RP-User-Data element of RP-ACK PDU; format is same as for **<pdu>** in case of SMS, but without GSM 04.11 SC address field and parameter shall be enclosed in double quote characters like a normal string type parameter **<pdu>** For SMS: GSM 04.11 SC address followed by GSM 03.40 TPDU in hexadecimal format: ME/TA converts each octet of TP data unit into hexadecimal numbers containing two IRA characters (e.g. octet with integer value 42 is presented to TE as two characters 2A (IRA 50 and 65)). In the case of CBS: GSM 03.41 TPDU in hexadecimal format.

www.gsmsms.cn

Reference	Note
GSM 07.05	• Use CTRL-Z at the end of input to send the message and return OK. • Use ESC at the end of message input to abort message send operation. NO message is sent although display returns OK! • Sending e-mails via SMS: Note that some providers do not recognise @ symbol. Possible alternative “!” for “@” • After invoking of the command CMGW, CMGS, CMGC it is necessary to wait for the ">" symbol and only afterwards the text can be sent to the module • At baudrates lower than 19200 it is recommended to use the line termination character only (refer to +ATS3, default <CR>, pg. 23) before entering the text/pdu. Use of the line termination character followed by the response formating character (see +ATS4, default <LF>, pg. 23) can cause problems. • All characters entered behind the “>” symbol will be recognized as GSM characters. For example, “Backspace” (ASCII character 8) does not delete a character, but will be inserted into the SMS as an additional physical character. As a result, the character you wanted to delete still appears in the text, plus the GSM code equivalent of the Backspace key. See also Chapter 7.5 which provides the supported alphabet tables.

www.sendsms.at

5.7 AT+CMGW Write SMS message to memory

Test command AT+CMGW=?	Response **OK**
Execute command 1) If text mode (+CMGF=1): +CMGW[=<oa/da>[,tooa/toda>[,stat>]]] <CR> text is entered ctrl-Z/ESC><ESC> quits without sending 2) If PDU mode (+CMGF=0): +CMGW=<length>[,stat]<CR> PDU is given <ctrl-Z/ESC>	Response TA transmits SMS (either SMS-DELIVER or SMS-SUBMIT) from TE to memory storage <mem2>. Memory location <index> of the stored message is returned. Message status will be set to 'stored unsent' unless otherwise given in parameter <stat>. Note: SMS-COMMANDs and SMS-STATUS-REPORTs cannot be stored in text mode. If writing is successful: **+CMGW: <index> OK** If error is related to ME functionality: **+CMS ERROR: <err>** Parameter **<oa>** GSM 03.40 TP-Originating-Address Address value field in string format; BCD numbers (or GSM default alphabet characters) are converted into characters; type of address given by **<tooa>** **<da>** GSM 03.40 TP-Destination-Address Address-Value field in string format; BCD numbers (or GSM default alphabet characters) are converted into characters; type of address given by **<toda>** **<tooa>** GSM 04.11 TP-Originating-Address Type-of-Address octet in integer format (default refer **<toda>**) **<toda>** GSM 04.11 TP-Destination-Address Type-of-Address octet in integer format (when first character of **<da>** is + (IRA 43) default is **145**, otherwise default is **129**) **<length>** integer type value indicating in the text mode (+CMGF=1) the length of the message body **<data>** (or **<cdata>**) in characters; or in PDU mode (+CMGF=0), the length of the actual TP data unit in octets (i.e. the RP layer SMSC address octets are not counted in the length). In text mode, the maximum length of an SMS depends on the used coding scheme: It is **160** characters if the 7 bit GSM coding scheme is used, and **140** characters according to the 8 bit GSM coding scheme. **<stat>** integer type in PDU mode (default 0), or string type in text mode (defauld "REC UNREAD"); indicates the status of message in memory; defined values: 0 "REC UNREAD" Received unread messages (default) 1 "REC READ" Received read messages 2 "STO UNSENT" Stored unsent messages 3 "STO SENT" Stored sent messages **<pdu>** In the case of SMS: GSM 04.11 SC address followed by GSM 03.40 TPDU in hexadecimal format: ME/TA converts each octet of TP data unit into hexadecimal numbers containing two IRA characters (e.g. octet with integer value 42 is presented to TE as two characters 2A (IRA 50 and 65)). In the case of CBS: GSM 03.41

www.sendsms.cn

	TPDU in hexadecimal format. <**index**> Index of message in selected storage <**mem2**>
Reference GSM 07.05	Note • Use CTRL-Z at the end of input to send the message and return OK. • Use ESC at the end of message input to abort message send operation. NO message is sent although display returns OK! • Sending e-mails via SMS: Note that some providers do not recognise @ symbol. Possible alternative “!” for “@” • After invoking of the command CMGW, CMGS, CMGC it is necessary to wait for the ">" symbol and only afterwards the text can be sent to the module • At baudrates lower than 19200 it is recommended to use the line termination character only (refer to +ATS3, default <CR>, pg. 23) before entering the text/pdu. Use of the line termination character followed by the response formating character (refer to +ATS4, default <LF>, pg. 23) can cause problems. • All characters entered behind the “>” symbol will be recognized as GSM characters. For example, “Backspace” (ASCII character 8) does not delete a character, but will be inserted into the SMS as an additional physical character. As a result, the character you wanted to delete still appears in the text, plus the GSM code equivalent of the Backspace key. See also Chapter 7.5 which provides the supported alphabet tables.

www.sendsms.cn

5.8 AT+CMSS Send SMS message from storage

Test command AT+CMSS=?	Response **OK** Parameter
Execute command +CMSS= <index>[,<da>[,<toda>]]	Response TA sends message with location value <**index**> from message storage <**mem2**> to the network (SMS-SUBMIT or SMS-COMMAND). If new recipient address <**da**> is given for SMS-SUBMIT, it shall be used instead of the one stored with the message. Reference value <**mr**> is returned to the TE on successful message delivery. Values can be used to identify message upon unsolicited delivery status report result code. 1) If text mode (+CMGF=1) and send successful: **+CMSS: <mr>[,scts>] OK** 2) If PDU mode (+CMGF=0) and send successful: **+CMSS: <mr>[,ackpdu>] OK** 3) If error is related to ME functionality: **+CMS ERROR: <err>** Parameter **<ackpdu>** GSM 03.40 RP-User-Data element of RP-ACK PDU; format is same as for <pdu> in case of SMS, but without GSM 04.11 SC address field and parameter shall be bounded by double quote characters like a normal string type parameter. **<index>** integer type; value in the range of location numbers supported by the associated memory **<da>** GSM 03.40 TP-Destination-Address Address-Value field in string format; BCD numbers (or GSM default alphabet characters) are converted into characters; type of address given by <**toda**> **<scts>** GSM 03.40 TP-Service-Centre-Time-Stamp in time-string format. **<toda>** GSM 04.11 TP-Destination-Address Type-of-Address octet in integer format (when first character of <**da**> is + (IRA 43) default is **145**, otherwise default is **129**) **<mr>** GSM 03.40 TP-Message-Reference in integer format
Reference GSM 07.05	Note

www.sendsms.cn

5.9 AT+CNMA New SMS message acknowledge to ME/TE, only phase 2+

Test command	Response
AT+CNMA=?	1) If text mode (+CMGF=1): **OK** 2) If PDU mode (+CMGF=0): +**CNMA:** (list of supported <**n**>s) **OK** Parameters See execute command
Execute command	**Response**
1) If text mode: AT+CNMA 2) If PDU mode: AT+CNMA[=<n>]	TA confirms successful receipt of a new message (SMS-DELIVER or SMS-STATUS-REPORT) which is routed directly to the TE. TA shall not send another +CMT or +CDS result code to TE until previous one is acknowledged. If ME does not receive acknowledgment within required time (network timeout), ME sends RP-ERROR to the network. TA shall automatically disable routing to TE by setting both <**mt**> and <**ds**> values of +CNMI to zero. Note: The command shall only be used when +CSMS parameter <**service**> equals **1** (= phase 2+). 1) If text mode: **OK** 2) If PDU mode: **OK** 3) If error is related to ME functionality: +**CMS ERROR:** <**err**> Parameters **<n>** 0 command operates similarly as defined for the text mode
Reference	Note
GSM 07.05	If multiplex mode is activated (+CMUX=0) the +CNMI parameter will be set to zero on all channels, if one channel fails to acknowledge an incoming message within the required time.

www.sendsms.cn

5.10 AT+CNMI New SMS message indications

Test command AT+CNMI=?	Response **+CNMI**: (list of supported <**mode**>**s**), (list of supported <**mt**>**s**), (list of supported <**bm**>**s**), (list of supported <**ds**>**s**), (list of supported <**bfr**>**s**) **OK** Parameter See set command
Read command AT+CNMI?	Response **+CNMI:** <**mode**>,<**mt**>,<**bm**>,<**ds**>,<**bfr**> **OK** Parameter See set command
Write command AT+CNMI = [<mode>] [,<mt>][,<bm>] [,<ds>][,<bfr>]	Response TA selects the procedure how the receipt of new SMS messages from the network is indicated to the TE when TE is active, e.g. DTR signal is ON. If TE is inactive (e.g. DTR signal is OFF), the reception of messages shall be performed as specified in GSM 03.38. Note1: If the DTR signal is not available or the state of the signal is ignored (V.25ter command &D0), reliable message transfer can be assured by using +CNMA acknowledgment procedure. Note2: The rules <**mt**>=**2** and <**mt**>=**3** for storing received SM are possible only if phase 2+ compatibility is activated with +**CSMS=1** Note3: The parameter <**ds**>=**1** is only available in phase 2+ **OK** If error is related to ME functionality: **+CMS ERROR:** <**err**> Parameter <**mode**> 0 Buffer unsolicited result codes in the TA. If TA result code buffer is full, indications can be buffered in some other place or the oldest indications may be discarded and replaced with the new received indications. 1 Discard indication and reject new received message unsolicited result codes when TA-TE link is reserved (e.g. in on-line data mode). Otherwise forward them directly to the TE. 2 Buffer unsolicited result codes in the TA when TA-TE link is reserved (e.g. in on-line data mode) and flush them to the TE after reservation. Otherwise forward them directly to the TE. 3 Forward unsolicited result codes directly to the TE. TA-TE link specific inband technique used to embed result codes and data when TA is in on-line data mode. <**mt**> Rules for storing received SMS depend on the relevant data coding method (refer to GSM 03.38 [2]), preferred memory storage (+CPMS) setting and this value Note: If AT command interface is acting as the only display device, the ME must support storage of class 0 messages and messages in the message waiting indication group (discard message) 0 No SMS-DELIVER indications are routed to the TE. 1 If SMS-DELIVER is stored in ME/TA, indication of the memory location is routed to the TE using unsolicited result code: **+CMTI:** <**mem**>,<**index**>

www.senderon.cn

		2	SMS-DELIVERs, except class 2 messages and messages in the message waiting indication group (store message) are routed directly to the TE using unsolicited result code: **+CMT**: **,<length><CR><LF><pdu>** (PDU mode enabled) **+CMT**: **<oa>,, <scts> [,<tooa>, <fo>, <pid>, <dcs>, <sca>, <tosca>, <length>]** <CR> <LF> **<data>** (text mode enabled)
		3	Class 3 SMS-DELIVERs are routed directly to the TE using unsolicited result codes defined in **<mt>=2**. Messages of other data coding schemes result in indication as defined in **<mt>=1**.
	<bm>		Rules for storing received CBMs depend on the relevant data coding method (refer to GSM 03.38 [2]), the setting of Select CBM Types (+CSCB) and this value:
		0	No CBM indications are routed to the TE.
		2	New CBMs are routed directly to the TE using unsolicited result code: **+CBM: <length><CR><LF><pdu>** (PDU mode enabled) or **+CBM: <sn>,<mid>,<dcs>,<page>,<pages><CR><LF><data>** (text mode enabled).
		3	Class 3 CBMs are routed directly to TE using unsolicited result codes defined in <bm>=2.
	<ds>	0	No SMS-STATUS-REPORTs are routed to the TE.
		1	SMS-STATUS-REPORTs are routed to the TE using unsolicited result code: **+CDS: <length><CR><LF><pdu> (PDU mode enabled)** or **+CDS**: **<fo>,<mr>,[<ra>],[<tora>],<scts>,<dt>, <st>** (text mode enabled)
		2	If SMS-STATUS-REPORT is routed into ME/TA, indication of the memory location is routed to the TE using unsolicited result code: **+CDSI: <mem>,<index>**
	<bfr>	1	TA buffer of unsolicited result codes defined within this command is cleared when **<mode> 1...3** is entered.
Unsolicited result code	Syntax of responses output when SMS is received:		
	+CMTI: <mem>,<index>		Indicates that new message has been received
	+CBMI: <mem>,<index>		Indicates that new CB message has been received
	+CMT: ,<length><CR><LF><pdu>		Short message is output directly
	+CBM: <length><CR><LF><pdu>		Cell broadcast message is output directly
	During each SMS or Cell Broadcast Messages the Ring Line will remain Logic „0“ for one second.		

www.sendsms.cn

Reference	Note
GSM 07.05	Parameters <**mt**>=**2,3** and <**ds**>=**1** are only available with GSM phase 2+ (see **+CSMS=1**). Incoming SMs or Status Reports have to be acknowledged with AT+CNMA=0 when using these phase 2+ parameters. Requirements specific to Multiplex mode: • In multiplex mode (AT+CMUX=0) only one channel can use a phase 2+ parameter. The parameter for <**mt**> and <**ds**> on the other channels have to be set to zero. • If either a SM or a Status Report is not acknowledged, all +CNMI parameter in all channels will be set to zero.

5.11 AT+CPMS Preferred SMS message storage

Test command AT+CPMS=?	Response **+CPMS:** (list of supported <**mem1**>**s**), (list of supported <**mem2**>**s**), (list of supported <**mem3**>**s**) Parameter See write command
Read command AT+CPMS?	Response **+CPMS: <mem1>,<used1>,<total1>,<mem2>,<used2>,<total2>, <mem3>,<used3>,<total3> OK** If error is related to ME functionality: **+CMS ERROR** Parameter See write command
Write command AT+CPMS= <mem1> [,<mem2> [,<mem3>]]	Response TA selects memory storages <**mem1**>**,** <**mem2**> **and** <**mem3**> to be used for reading, writing, etc. **+CPMS: <used1>,<total1>,<used2>,<total2>,<used3>,<total3> OK** If error is related to ME functionality: **+CMS ERROR:<err>** Parameter <**mem1**> Memory to be used when listing, reading and deleting messages: “SM” SIM message storage <**mem2**> Memory to be used when writing and sending messages: “SM” SIM message storage <**mem3**> Received messages will be placed to this storage if routing to TE is not set. See AT+CNMI command with parameter <**mt**>**=2** (Chapter 5.10). “SM” SIM message storage <**usedx**> Number of messages currently in <**memx**> <**totalx**> Number of messages storable in <**memx**> <**totalx**> Number of messages storable in <**memx**>
Reference GSM 07.05	Note

www.sendsms.cn

5.12 AT+CSCA SMS service centre address

Test command AT+CSCA=?	Response **OK**
Read command AT+CSCA?	Response **+CSCA: <sca>,<tosca> OK** Parameter See write command
Write command AT+CSCA=<sca> [,<tosca>]	TA updates the SMSC address, through which mobile originated SMs are transmitted. In text mode, setting is used by send and write commands. In PDU mode, setting is used by the same commands, but only when the length of the SMSC address coded into <pdu> parameter equals zero. Note: this command writes the service centre address to non-volatile memory. Response **OK** Parameter **<sca>** GSM 04.11 RP SC address Address value field in string format; BCD numbers (or GSM default alphabet characters) are converted into characters; type of address given by **<tosca>** Maximum length of address: 20 characters **<tosca>** Service centre address format GSM 04.11 RP SC address Type-of-Address octet in integer format (default refer **<toda>**)
Reference GSM 07.05	Note In case of using no parameter after AT+CSCA= the content of **<sca>** will be deleted.

www.soanisms.cn

5.13 AT+CSCB Select cell broadcast messages

Test command AT+CSCB=?	Response **+CSCB**: (list of supported <**mode**>s) Parameter See write command
Read command AT+CSCB?	Response **+CSCB: <mode>,<mids>,<dcss>** Parameter See write command
Write command AT+CSCB=[<mode>[,<mids>[,<dcss>]]]	Parameter <**mode**> 0 Accepts messages that are defined in <**mids**> and <**dcss**> 1 Does not accept messages that are defined in <**mids**> and <**dcss**> <**mids**> String type; combinations of CBM message IDs (e.g. "0,1,5,320-478,922"). The number of ranges in <**mids**> parameter string is limited to 6 <**dcss**> String type; combinations of CBM data coding schemes (e.g. "0-3,5") Note: If <**mode**>=1 is selected the parameter <**mids**> has to be given as only one area (e.g. “0-99“)
Reference GSM 07.05	Note

www.gsmdsms.cn

5.14 AT+CSDH Show SMS text mode parameters

Test command AT+CSDH=?	Response +**CSDH**: (list of supported <**show**>s) **OK** Parameter See write command
Read command AT+CSDH?	Response +**CSDH:**<**show**> **OK** Parameter See write command
Write command AT+CSDH= <show>	Response TA sets whether or not detailed header information is shown in text mode result codes. **OK** Parameter <**show**> 0 do not show header values defined in commands +CSCA and +**CSMP (**<**sca**>**,** <**tosca**>**,** <**fo**>**,** <**vp**>**,** <**pid**> **and** <**dcs**>**)** nor <**length**>**,** <**toda**> or <**tooa**> in +**CMT,** +**CMGL,** +**CMGR** result codes for SMS-DELIVERs and SMS-SUBMITs in text mode; for SMS-COMMANDs in +**CMGR** result code, do not show <**pid**>**,** <**mn**>**,** <**da**>**,** <**toda**>**,** <**length**> or <**cdata**> 1 show the values in result codes
Reference GSM 07.05	Note

www.senecms.cn

5.15 AT+CSMP Set SMS text mode parameters

Test command AT+CSMP=?	Response **OK**
Read command AT+CSMP?	Response **+CSMP:<fo>,<vp/scts>,<pid>,<dcs> OK** Parameter See set command
Set command AT+CSMP=<fo>[,<vp/scts>[,<pid>[,<dcs>]]]	Response TA selects values for additional parameters needed when SM is sent to the network or placed in a storage when text format message mode is selected. It is possible to set the validity period starting from when the SM is received by the SMSC (<**vp**> is in range 0... 255) or define the absolute time of the validity period termination (<**vp**> is a string). The format of <**vp**> is given by <**fo**>**.** If TA supports the enhanced validity period format, see GSM 03.40), it shall be given as a hexadezimal coded string (refer e.g. <**pdu**>) with quotes. Note: When storing a SMS_DELIVER from the TE to the preferred memory storage in text mode (refer write command to Message Memory +**CMGW),** <**vp**> field can be used for <**scts**> Parameter <**fo**> depending on the command or result code: first octet of GSM 03.40 SMS-DELIVER, SMS-SUBMIT (default 17), or SMS-COMMAND (default 2) in integer format <**scts**> GSM 03.40 TP-Service-Centre-Time-Stamp in time-string format (refer <**dt**>) <**vp**> depending on SMS-SUBMIT <fo> setting: GSM 03.40 TP-Validity-Period either in integer format (default 167)), in time-string format (refer <**dt**>), or if is supported, in enhanced format (hexadecimal coded string with quotes) <**pid**> Protocol-Identifier in integer format (default 0), refer GSM 03.40 <**dcs**> SMS Data Coding Scheme (default 0), or Cell Broadcast Data Coding Scheme in integer format depending on the command or result code: GSM 03.38
Reference GSM 07.05	Note The command writes the parameters to the non-volatile memory.

www.sendsms.ch

5.16 AT+CSMS Select Message Service

Test command AT+CSMS=?	Response **+CSMS**: (list of supported <**service**>s) **OK** Parameter See write command
Read command AT+CSMS?	Response **+CSMS: <service>,<mt>,<mo>,<bm> OK** Parameter See write command
Write command AT+CSMS= <service>	Response **+CSMS: <mt>,<mo>,<bm> OK** If error is related to ME functionality: **+CMS ERROR: <err>** Parameter **<service>** 0 GSM 03.40 and 03.41 (the syntax of SMS AT commands is compatible with GSM 07.05 Phase 2 version 4.7.0; Phase 2+ features which do not require new command syntax may be supported, e.g. correct routing of messages with new Phase 2+ data coding schemes) 1 GSM 03.40 and 03.41 (the syntax of SMS AT commands is compatible with GSM 07.05 Phase 2+ version; the requirement of <service> setting 1 is mentioned under corresponding command descriptions). **<mt>** Mobile Terminated Messages: 0 Type not supported 1 Type supported **<mo>** Mobile Originated Messages: 0 Type not supported 1 Type supported **<bm>** Broadcast Type Messages: 0 Type not supported 1 Type supported
Reference GSM 07.05	Note If CSMS Mode is switched from Phase 2+ to Phase 2 and one or more CNMI Parameter are Phase 2+ specific a '+CMS ERROR: unknown error' will apear. It is recommended to switch the CNMI Parameters to Phase 2 specific values before entering Phase 2.

www.sendsms.cn

6 Siemens defined AT commands for enhanced functions

Self-defined commands do not have to be implemented in accordance with the official syntax. The "+C" string can therefore be replaced by "^S" ("^" = 0x5E). If a self-defined command with the same syntax will be included in future in the GSM recommendations, the command can be addressed with both strings.

6.1 AT+CXXCID Display card ID (identical to AT^SCID)

Test command AT+CXXCID=?	Response **OK** If error is related to ME functionality: **+CME ERROR: <err>** Parameter
Execute command AT+CXXCID	Response TA returns the card identification number in SIM (SIM file EF ICCID, see GSM 11.11 Chap.10.1.1) as string type. See **^SCID** Parameter See **^SCID**
Reference Siemens	Note See also GSM Engine A1: ^SCID

www.sendsms.cn

6.2 AT^MONI Monitor idle mode and dedicated mode

Test command AT^MONI=?	Response ^MONI: (list of supported < **period** >s) **OK**
Write command AT^MONI[=<period>]	This command can be used to retrieve information of the serving/dedicated cell *automatically* every *n* seconds. It is cancelled by any character sent to serial port except if autobauding is enabled (+IPR=0). Then type character ´a´ to abort. Note: The two header lines (see below) are output after every ten data lines. Response See execute command Parameter <**period**> 1 – 254 Display period in seconds
Execute command AT^MONI	This command can be used to retrieve the cell parameters of the serving/dedicated cell *on request*. Note: The length of following output lines exceeds 80 characters. Therefore a terminal program may draw a carriage return on a screen. However, this is not part of the response.

Response (Examples)

ME is not connected:

```
Serving Cell                                          I Dedicated channel
chann rs  dBm  PLMN  LAC cell NCC BCC PWR RXLev  C1 I chann TS timAdv PWR  dBm Q
 ChMod
   6  31  -48 26202 0145 291A   4   6  33  -104  56 I    No connection

OK
```

ME is connected:

```
Serving Cell                                          I Dedicated channel
chann rs  dBm  PLMN  LAC cell NCC BCC PWR RXLev  C1 I chann TS timAdv PWR  dBm Q
 ChMod
   6  24  -65 26202 0145 291A   4   6  33  -104  55 I   47   3      2  13  -65 4
 S_EFR

OK
```

Parameters	*Serving Cell:* **chann** traffic channel number **rs** RSSI value 0 – 63 (RSSI = Received signal strength indication) **dBm** receiving level in dBm **PLMN** PLMN ID code **LAC** location area code, see note below. **cell** Cell ID, see note below. **NCC** PLMN colour code **BCC** Base Station colour code **PWR** maximal power level used on RACH channel **RXLev** minimal receiving level (in dBm) to allow registration **C1** coefficient for base station selection

www.sendsms.cn

	Dedicated channel: **chann** traffic channel number Note: <**chann**> = **0** signals frequency hopping. **TS** timeslot no. **timAdv** timing advance in bits **PWR** current power level **dBm** receiving level in dBm **Q** receiving quality (0–7) **ChMod** channel mode (S_HR: Half rate, S_FR: Full rate, S_EFR: Enhanced Full Rate)
Reference Siemens	Note • If during a connection the radio cell is changed, the parameters **LAC** and **Cell** will not be updated (see also +**CREG**, pg 101). • As a result of this command the requested output may be issued by the ME at any moment (related to <**period**>). To indicate such unsolicited result codes to a connected application, the ME usually activates it´s Ring Line (Logic "0") for one second. This is not true for the unsolicited output of **AT^MONI** and **AT^MONP**.

www.sendsms.cn

6.3 AT^MONP Monitor neighbour cells

Test command AT^MONP=?	Response ^MONP: (list of supported < **period** >s) **OK**
Write command AT^MONP=[<period>]	This command can be used to retrieve information of up to six neighbour cells *automatically* every *n* seconds. It is cancelled by any character sent to the serial port except if autobauding is enabled (+IPR=0). Then type character ´a´ to abort. Response See execute command Parameter <**period**> 1 – 254 Display period in seconds
Execute command AT^MONP	This command can be used to obtain information of up to six neighbour cells *on request*. Response (Example) chann rs dBm PLMN BCC C1 C2 504 18 -78 26203 1 27 27 476 15 -83 26203 3 22 22 421 13 -88 26203 1 17 17 440 10 -93 26203 7 12 12 446 9 -95 26203 7 10 10 417 8 -97 26203 4 8 8 OK Parameter: **Chann** Channel number **rs** RSSI value 0 – 63 (RSSI = Received signal strength indication) **dBm** Receiving level in dBm **PLMN** PLMN ID code **BCC** Base Station colour code **C1** coefficient for base station selection **C2** coefficient for base station selection
Reference Siemens	Note As a result of this command the requested output may be issued by the ME at any moment (related to <**period**>). To indicate such unsolicited result codes to a connected application, the ME usually activates it´s Ring Line (Logic "0") for one second. This is not true for output of **AT^MONI** and **AT^MONP**.

www.sendsms.cn

6.4 AT^SACM Advice of charge and query of ACM and ACMmax

Test command AT^SACM=?	Response **^SACM**: (list of supported <**n**>s) **OK** Parameter See write command
Execute command AT^SACM	The execute command can be used to query the current mode of the Advice of Charge supplementary service, the SIM values of the accumulated call meter (ACM) and accumulated call meter maximum (ACMmax). Response **^SACM: <n>,<acm>,<acm_max> OK** If error is related to ME functionality: **+CME ERROR: <err>** Parameter **<n>** See write command **<acm>** ACM, string type; three bytes of the current ACM value in hexadecimal format (e.g. "00001E" indicates decimal value 30) 000000–FFFFFF **<acm_max>** ACMmax, string type; three bytes of the max. ACM value in hexadecimal format (e.g. "00001E" indicates decimal value 30) 000000 disable ACMmax feature 000001-FFFFFF **<ccm>** string type; three bytes of the current CCM value in hexadecimal format (e.g. "00001E" indicates decimal value 30); bytes are coded in the same way as ACMmax value in the SIM 000000-FFFFFF
Write command AT^SACM=<n>	The write command enables or disables the presentation of unsolicited result to report the call charges. Response **OK** or if error is related to ME functionality: **+CME ERROR: <err>** Parameter **<n>** 0 suppress unsolicited result code 1 display unsolicited result code When you power down or reset the ME with AT+CFUN=1,1 the URC presentation mode will be reset to its default. To benefit from the URC it is recommended to have the setting included in the user profile saved with AT&W, or to select **<n>=1** every time you reboot the ME. Unsolicited result code When activated, an unsolicited result code is sent when the CCM value changes, but not more often than every 10 seconds **+CCCM: <ccm>**
Reference Siemens	Note See also GSM07.07: AT+CACM, AT+CAMM, AT+CAOC

www.sendsms.cn

6.5 AT^SBC Battery charging / discharging and charge control

This chapter is only applicable to TC35 and TC37, it is not intended for the TC35 Terminal.

Responses returned by the AT^SBC command vary with the operating mode of the ME:

Normal mode:	ME is switched on by Ignition pin and running the SLEEP, IDLE, TALK or DATA mode. Charger is not connected. AT^SBC can be used to query the battery capacity and the power consumption of ME and application (if value of application was specified before as <current>).
Normal mode + charging:	Allows charging while ME is switched on by Ignition pin and running the SLEEP, IDLE, TALK or DATA mode. AT^SBC returns charger status and power consumption of ME / application. Battery capacity is not available.
Charge-only mode:	Allows charging while ME is detached from GSM network. When started, the mode is indicated by the URC "SYSSTART CHARGE-ONLY MODE". AT^SBC returns charger status and power consumption of ME / application. Percentage of battery capacity is not available. In Charge-only mode a limited number of AT commands is accessible (see Table 9). There are several ways to activate the Charge-only mode: a) from Power Down mode: Connect charger while ME was powered down with AT^SMSO b) from Normal mode: Connect charger, then enter AT^SMSO.
Alarm mode:	No charging functionality, i.e. charging does not start even though the charger connects to the POWER lines. Battery parameters are not available.

www.seriousms.ru

Charging begins once the charger connects to the POWER pins of the ZIF connector (except for the Alarm mode). Please refer to the /1/ ("Hardware Interface Description") supplied with your GSM engine and the Application Note "Charging the Battery Pack" for details on the charging process.

Test command	Response
AT^SBC=?	^**SBC**: (list of supported <**bcs**>s),(list of supported <**bcl**>s),<**mpc**> module power consumption Defined values <**bcs**> 0 No charging adapter is connected 1 Charging adapter is connected 2 Charging adapter is connected, charging in progress 3 Charging adapter is connected, charging has finished 4 Charging error, charging is interrupted 5 False charging temperature, charging is interrupted while temperature is beyond allowed range **<bcl>** Battery capacity 0, 20, 40, 60, 80, 100 percent of remaining capacity (6 steps) 0 indicates that either the battery is exhausted or the capacity value is not available <**mpc**> Average power consumption: Value (0...5000) of average power consumption (mean value over a couple of seconds) in mA. See read and write command for details.

Read command AT^SBC?	Response **^SBC: <bcs>,<bcl>,<mpc>** <**bcs**> Connection status of battery pack <**bcl**> Battery charge level While charging is in progress (charging adapter connected) the battery capacity is not available. Consequently, parameter <**bcl**>=0. To query the battery capacity disconnect the charger. <**mpc**> Average power consumption <**mpc**> is obtained from the ME's power consumption, plus the value you have specified for the application by using the write command **AT^SBC=<current>**. Remember that the ME's power consumption varies with its operating mode (IDLE, TALK, DATA) and the power level. If <**current**> was not yet specified and no battery pack NTC is detected <**mpc**> returns only the module's present power consumption. If <**current**> was not yet specified, but the NTC of the connected battery pack is detected, an offset value of 200mA will, by default, be added. 200mA is an estimated value which represents the power consumption of a typical external application. Drawn from practical experience it serves as a precaution to ensure proper charging in case you have not entered <**current**>. It is strongly recommended that you enter the correct power consumption of your application as described below. Note: If the battery does not incorporate an NTC, or the battery and the NTC are not compliant with the requirements specified in /1/, the battery cannot be detected by the ME.
Write command AT^SBC= <current>	Use the write command to specify the power consumption of your external application. This information enables the ME to calculate the average power consumption <**mpc**> and to properly control the charging process. If the value is not correct the entire charging process may be affected. Resulting problems may be wrong responses to the AT^SBC read command, overcharging, or the battery does not reach full capacity. The write command registers the serial port as the output channel for unsolicited result codes related to charging. When the ME is powered down or reset, the value of <**current**> is restored to its default. This affects the charging control and disables the presentation of unsolicited result codes. Therefore, the parameter should be set every time when needed after rebooting the ME. Response **OK** If error is related to ME functionality: **+CME ERROR: <err>** Parameter <**current**> Enter the current consumption of your application in mA (0...5000). If used, the current provided over the by 2.9V VDD pin of the ZIF interface (maximum 70mA) must be added, too.

www.sendsms.cn

	Unsolicited result code **^SBC: Undervoltage** The message will be reported, for example, when you attempt to set up a call while the voltage is close to the critical limit and further power loss is caused during the transmit burst. To remind you that the battery needs to be charged soon, the URC appears several times before the module switches off. In this case, the battery capacity is still sufficient to set up a short call. When the module is in IDLE mode it takes typically one minute to deregister from the network and to switch off.
Reference Siemens	Note • If Multiplex mode is active, any virtual channel can be used to enter the write command and to specify <current>. The undervoltage URC, however, appears simultaneously on all three channels. • The URC "SYSSTART CHARGE-ONLY MODE" is indicated automatically when the engine enters this mode (except when autobauding is active). Unlike the undervoltage URC, it cannot be disabled or enabled by the user.

www.sendsms.cn

Table 9: Summary of AT commands available in Charge-only and Alarm mode

AT command	Use
AT+CALA	Set alarm time
AT+CCLK	Set date and time of RTC
AT^SBC	Monitor charging process Note: While charging is in progress, no battery parameters are available. To query the battery capacity disconnect the charger. If the charger connects *externally* to the host device no charging parameters are transferred to the module. In this case, the command cannot be used.
AT^SCTM	Query temperature of GSM engine, enable or disable URCs
AT^SMSO	Power down GSM engine

6.6 AT^SCID Display SIM card identification number

Test command AT^SCID=?	Response **OK** If error is related to ME functionality: **+CME ERROR: <err>** Parameter
Execute command AT^SCID	Response TA returns the identification number of the SIM card (see GSM 11.11 Chapter 10.1.1). **^SCID: <cid> OK** If error is related to ME functionality: **+CME ERROR: <err>** Parameter **<cid>** string type: card identification number of SIM card
Reference Siemens	Note

www.sendsms.cn

6.7 AT^SCKS Set SIM connection presentation mode and query SIM connection status

Test command AT^SCKS=?	Response **^SCKS:** (list of supported <**n**>s) **OK** Parameter See write command
Read command AT^SCKS?	Response TA returns the URC presentation mode and the status of the SIM card connection. **^SCKS: <n>, <m> OK** Parameter See write command
Write command AT^SCKS=<n>	Response TA enables or disables the presentation of URCs to report whether or not the SIM card is connected. When the ME is powered down or reset with AT+CFUN=1,1 the presentation mode <**n**> will be restored to its default. To benefit from the URCs, it is recommended to have the setting <**n**>=**1** included in the user profile saved with AT&W, or to activate the setting every time you reboot the ME. **OK** Parameter <**n**> 0 Suppress unsolicited result codes 1 Output unsolicited result codes <**m**> 0 No card 1 Card in card reader Unsolicited result code When the status "SIM connected" has changed, an unsolicited result code is sent to the TE. **^SCKS: <m>** Parameter See write command
Reference Siemens	Note Note that the connection status <**m**> reflects only the status of the card holder tray. If an empty tray is inserted, a series of URCs will be output that alternatingly indicate the status 1 and 0 (= SIM card connected and not connected). To avoid this effect, do not insert an empty drawer.

www.sendsms.cn

6.8 AT^SCNI List Call Number Information

Test command AT^SCNI=?	Response **OK**
Execute command AT^SCNI	Response TA returns a list of current calls of ME. **[^SCNI: <id1>[,<cs>[,<number>,<type>]]]** **[^SCNI: <id2>[,<cs>[,<number>,<type>]]]** **[...] OK** If error is related to ME functionality: **+CME ERROR: <err>**
	Parameter **<idx>** 1–7 integer type; call identification number as described in GSM 02.30[19] subclause 4.5.5.1; this number can be used in +CHLD command operations **<cs>** Call status of respective call number (first parameter) 0 call hold 1 call in progress 2 Waiting call **<number>** string type phone number in format specified by <type> **<type>** type of address octet in integer format; 145 when dialling string includes international access code character “+”, otherwise 129
Reference Siemens	Note See also GSM 07.07: AT+CLCC

www.sendsms.cn

6.9 AT^SCTM Set critical operating temperature presentation mode or query temperature

Use this command to monitor the temperature range of the module and the battery. The write command enables or disables the presentation of URCs to report critical temperature limits.

Test command AT^SCTM=?	Response **^SCTM:** (list of supported <**n**>s) **OK** Parameter See write command
Read command AT^SCTM?	Response TA returns the URC presentation mode and information about the current temperature range of the module (not of the battery). **^SCTM: <n>, <m> OK** Parameters <**n**> 0 Presentation of URCs is disabled. 1 Presentation of URCs is enabled. <**m**> -2 Below lowest temperature limit (causes immediate switch-off) -1 Below low temperature alert limit 0 Normal operating temperature 1 Above upper temperature alert limit 2 Above uppermost temperature limit (causes immediate switch-off)
Write command AT^SCTM=<n>	Select <**n**> to enable or disable the presentation of the URCs. Please note that the setting will not be stored upon Power Down, i.e. after restart or reset, the default level 0 will be restored. To benefit from the URCs <**n**>=**1** needs to be selected every time you reboot the GSM engine. Response **OK** Parameters <**n**> 0 Suppress URCs. 1 Output URCs.
	Unsolicited result code If enabled, URCs will be automatically sent to the TA when the temperature reaches or exceeds the critical level, or when it is back to normal. **^SCTM_A: <m>** for battery (accumulator) temperature **^SCTM_B: <m>** for module (board) temperature

www.sendsms.cn

Reference Siemens	Note **Important:** • Please refer to the "Hardware Inferface Description" supplied with your GSM engine for specifications on critical temperature ranges. • To avoid damage the module will shut down once the critical temperature is exceeded. The procedure is equivalent to the power-down initiated with **AT^SMSO**. • The shutdown takes effect no matter whether URCs are enabled or disabled: URCs indicating the alert level "2" or "-2" are followed by immediate shutdown. If <**n**> is 0 the user is not informed before the module shuts down. • URCs indicating the alert level "1" or "-1" are intended to enable the user to take appropriate precautions, such as protect the module or battery from exposure to extreme conditions, or save or back up data etc.
Examples	URCs issued when the operating temperature is out of range: `^SCTM_A: 1` Caution: Battery close to overtemperature limit. `^SCTM_A: 2` Alert: Battery above overtemperature limit. Engine switches off. `^SCTM_B: 1` Caution: Engine close to overtemperature limit. `^SCTM_B: 2` Alert: Engine is above overtemperature limit and switches off. `^SCTM_A: -1` Caution: Battery close to undertemperature limit. `^SCTM_A: -2` Alert: Battery below undertemperature limit. Engine switches off. `^SCTM_B: -1` Caution: Engine close to undertemperature limit. `^SCTM_B: -2` Alert: Engine is below undertemperature limit and switches off.
Example	URCs issued when the temperature is back to normal (URC is output once): `^SCTM_A: 0` Battery temperature back to normal temperature. `^SCTM_B: 0` Engine back to normal temperature

www.sendsms.cn

6.10 AT^SDLD Delete the “last number redial“ memory

Test command AT^SDLD=?	Response **OK**
Execute command AT^SDLD	The execute command deletes all numbers stored in the LD memory. Response **OK/ERROR/+CME ERROR**
Reference Siemens	Note

6.11 AT^SHOM Display Homezone

Test command AT^SHOM=?	Response **OK** Parameter See execute command
Execute command AT^SHOM	Response TA returns homezone state **^SHOM: <homezonestate> OK** Parameters **<homezonestate>** 0 ME is out of Homezone 1 ME is within the Homezone
Reference Siemens	Note

www.sendsms.cn

6.12 AT^SLCD Display Last Call Duration

Test command AT^SLCD=?	Response **OK** Parameter See execute command
Execute command AT^SLCD	Response TA returns last call duration or current call duration **^SLCD: <time> OK** Parameter **<time>** string type value; format is "hh:mm:ss", where characters indicate hours, minutes, seconds; e.g. 22:10:00 “22:10:00", max values are 9999:59:59
Reference Siemens	Note

6.13 AT^SLCK Facility lock

Test command AT^SLCK=?	Response **^SLCK**: (list of supported <**fac**>s) **OK** Parameter See write command
Write command AT^SLCK= <fac>,<mode> [,<passwd> [,<class>]]	Response This command is used to lock, unlock or interrogate a ME or a network facility <**fac**>. The command can be aborted while network facilities are being set or interrogated. If <**mode**><>**2** and command is successful **OK** If <**mode**>=**2** and command successful **^SLCK: <status>[,<class1>[<CR><LF>** **^SLCK: <status>, class2....]] OK** If error is related to ME functionality: **+CME ERROR: <err>** Parameter <**fac**> Phone security locks set by user / provider "PS" Phone locked to SIM card (phone code). ME requests password when other than current SIM card inserted; ME may remember certain number of previously used cards thus not requiring password when they are inserted. "SC" SIM (lock SIM cards). SIM requests password upon ME power-up and when this lock command issued. "FD" SIM fixed dialling memory: If the mobile is locked to FD, only the numbers stored to the FD memory can be dialled (up to 7 numbers). If PIN2 authentication has not been performed during the current session, PIN2 is required as <passwd>. "CS" Keypad lock (not supported since keypad cannot be connected) Supplementary Service: Call barring "AO" BAOC (Bar All Outgoing Calls) "OI" BOIC (Bar Outgoing International Calls) "OX" BOIC-exHC (Bar Outgoing International Calls except to Home Country) "AI" BAIC (Bar All Incoming Calls) "IR" BIC-Roam (Bar Incoming Calls when Roaming outside the home country) "AB" All Barring services (applicable only for <mode>=0) "AG" All outGoing barring services (applicable only for <mode>=0) "AC" All inComing barring services (applicable only for <mode>=0) Factory set facility locks: "PF" lock Phone to the very First SIM card "PN" Network Personalisation "PU" Network subset Personalisation "PP" Service Provider Personalisation "PC" Corporate Personalisation

www.sendsms.cn

	<**mode**> 0 unlock 1 lock 2 query status <**passwd**> password <**class**> sum of integers each representing a <**class**> of information: 1 voice 2 data 4 fax 7 sum of the integers 1, 2 and 4. Call barring for voice, data and fax. 8 short message service <**status**> 0 off 1 on
Reference Siemens	Note See also specification of AT+CLCK in GSM 07.07 and further details in Chapter 4.18.

www.sendsms.cn

6.14 AT^SMGL List SMS messages from preferred storage

Test command AT^SMGL=?	Response See write command + CMGL Parameters See command +CMGL
Execute/Write command AT^SMGL [=<stat>]	Response TA returns messages with status value <**stat**> from message storage <**mem1**> to the TE. The status of the messages is u n c h a n g e d (unread remains unread). Otherwise: See command +CMGL Parameters See command +CMGL
Reference Siemens	Note See also GSM 07.05: +CMGL

6.15 AT^SMGO Set or query SMS overflow presentation mode or query SMS overflow

Test command AT^SMGO=?	Response **^SGMO**: (list of supported <**n**>s) **OK** Parameter See write command
Read command AT^SMGO?	Response TA returns overflow presentation mode and SMS overflow status **^SGMO: <n>,<mode> OK** If error is related to ME functionality: **+CME ERROR: <err>** Parameter See write command
Write command AT^SMGO=<n>	Response TA sets overflow presentation mode **OK** Parameter <**n**> SMS overflow presentation mode 0 disable (default) 1 enable <**mode**> SMS overflow status 0 space available 1 SMS buffer full (SIM card) 2 Buffer full and new message waiting in SC for delivery to phone
	Unsolicited result code When the status SIM overflow changes, an unsolicited result code is sent to TE **^SMGO: <mode>** Parameter See write command
Reference Siemens	Note Indication during data transfer via break (100ms). Data transmission will only be interrupted by a break and for only 100ms.

www.sendsms.cn

6.16 AT^SMGR Read SMS message without set to REC READ

Test command AT^SMGR=?	Response **OK**
Execute command AT^SMGR= <index>	Parameter **See AT+CMGR**
Reference GSM 07.05	Note The AT^SMGR command is a specific Siemens command with the same syntax as “AT+CMGR Read SMS message”. The only difference is that the SMS Message, which has REC_UNREAD status, is not overwritten to REC_READ.

6.17 AT^SMSO Switch off mobile station

Test command AT^SMSO=?	Response **OK**
Execute command AT^SMSO	Response **^SMSO: MS OFF OK** Device will be switched off (power down mode)
Reference Siemens	Note Do not send any command after this command

www.sendsms.cn

6.18 AT^SM20 Set M20 Compatibility

Test command AT^SM20=?	Response **OK**
Read command AT^SM20?	Response **^SM20: <n>** **OK** Parameters See write command
Write command AT^SM20=<n>	Response Response M20 is an earlier, widely used SIEMENS GSM engine. The AT^M20 command simply controls the behaviour of the ATD command during voice calls. Please note that this command has no effect on any other differences between M20 and products based on x35/37 firmware. **OK** Parameters **<n>** 0 Compatible to x35/37mobiles. If this mode is active, TA returns OK right after attempting a call. 1 Compatible to M20. If the M20 mode is active, TA returns OK once the call is successfully set up. Issuing any command before TA returns OK will cancel the call setup.
Reference Siemens	Note

www.sendsms.cn

6.19 AT^SNFD Set audio parameters to manufacturer default values

Test command AT^SNFD=?	Response **OK**
Execute command AT^SNFD	Response TA sets the active audio parameters to manufacturer defined default values. **OK**
Reference Siemens	Note The restored values are: <**inBbcGain**>, <**inCalibrate**>, <**outBbcGain**>, <**outCalibrate[0 to 4]**>, <**sideTone**> of all audio modes

6.20 AT^SNFI Set microphone path parameters

Test command AT^SNFI=?	Response **^SNFI:** (list of supported <**inBbcGain**>s), (list of supported <**inCalibrate**>s) **OK** Parameters See write command
Read command AT^SNFI?	Response **^SNFI:** < **inBbcGain** >, <**inCalibrate**> **OK** Parameters See write command
Write command AT^SNFI=<inBbcGain>, <inCalibrate>	Response TA sets microphone path amplifying. **OK**
	Parameters <**inBbcGain**> Setting for ADC gain Amplifier 0 - 7 (0=0dB, 7=42dB, 8 steps of 6 dB) <**inCalibrate**> Multiplication factor 0 – 32767 for input samples attenuation=20*log (inCalibrate/32767)
Reference Siemens	Note • Write command works only in audio modes 2 to 6! • Read and write options of this command refer to the active audio mode. • The range of <**inCalibrate**> is up to 65535 but will be suppressed to 32767. Values above <**inCalibrate**> = 65535 will cause a failure • Changed values have to be stored with **^SNFW**. • Attention! When you adjust audio parameters avoid exceeding the maximum allowed level. Bear in mind that exposure to excessive levels of noise can cause physical damage to users! • The default values are customer specific.

www.sendsms.cn

6.21 AT^SNFM Mute microphone

Test command AT^SNFM=?	Response **^SNFM:** (list of supported <**mute**>s) **OK** Parameter See write command
Read command AT^SNFM?	Response **^SNFM:** <**mute**> **OK** Parameter See write command
Write command AT^SNFM=<mute>	Response TA switches on/off the microphone **OK** Parameter <**mute**> 0 Mute microphone 1 Microphone on
Reference Siemens	Note This command can be used in all audio modes and during a voice call only.

www.sendsms.cn

6.22 Audio programming model

The following figure illustrates how the signal path can be adjusted with the AT command parameters described in the Chapters 6.19 to 6.26

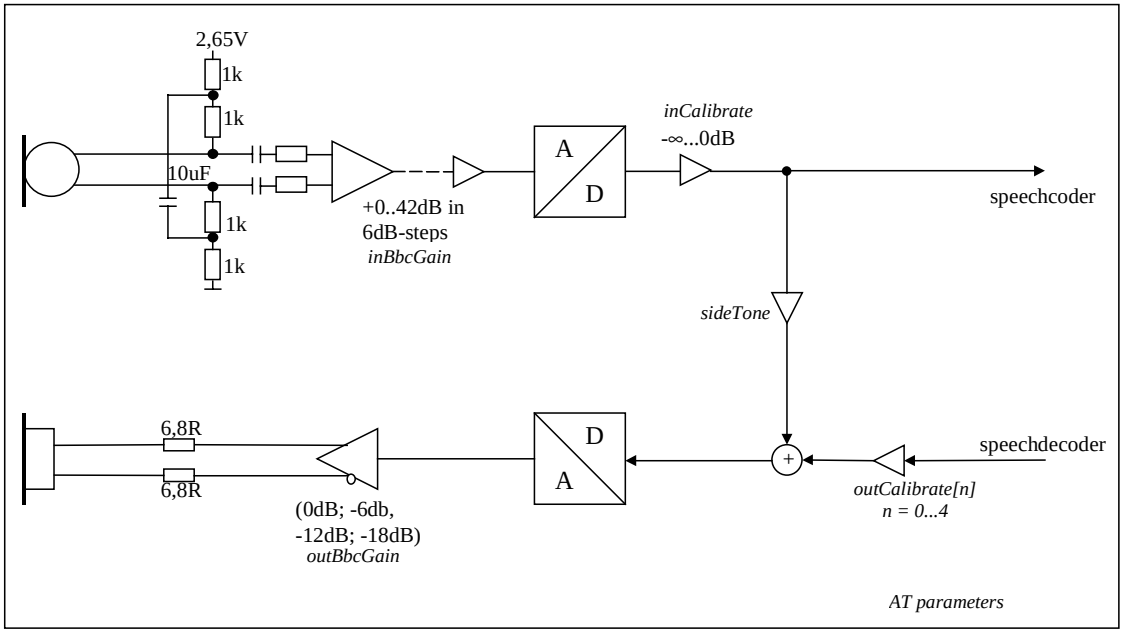

Figure 1: AT audio programming model

6.23 AT^SNFO Set audio output (= loudspeaker path) parameter

Test command AT^SNFO=?	Response **^SNFO**: (list of supported <**outBbc Gain**>), (list of supported <**outCalibrate[0...4]** >), (list of supported <**outStep**>), (list of supported <**sideTone**>**s**) OK Parameter See write command
Read command AT^SNFO?	Response **^SNFO: <outBbcGain>, <outCalibrate[0]>,...<outCalibrate[4]>, <outStep>, <sideTone>** **OK** Parameter See write command
Write command AT^SNFO=<outBbcGain>,<outCalibrate[0]>,...<outCalibrate[4]>,<outStep>,<sideTone>	Set TA´s loudspeaker path parameters. Response <**outBbcGain**> <**outCalibrate[0]**>...<**outCalibrate[4]**> <**(outStep)**> <**sideTone**> **OK** Parameters <**outBbcGain**> Setting for DAC gain amplifier attenuation 0 – 3 (0=0 dB, 3=-18 dB, 4 steps of 6 dB) <**outCalibrate[0]**> **...** <**outCalibrate[4]**> Multiplication factor 0 – 32767 for output samples Attenuation = 20 * log (outCalibrate[n]/32767) <**outStep**> Setting of actual volume; 0 – 4, i.e. outCalibrate[n] <**sideTone**> Multiplication factor 0 – 32767 determining how much of the original microphone signal is added to the earpiece signal. Side Tone Gain/dB = 20 * log (sideTone/32767)
Reference Siemens	Note • Write command works only in audio modes 2 to 6! • Read and write options of this command refer to the active audio mode. • The values <**outStep**> can be changed also by ^SNFV. • The range of <**outCalibrate**> is up to 65535 but will be suppressed to 32767. A value above <**outCalibrate**> = 65535 will cause a error • Changed values will not be stored automatically, but via the AT command AT^SNFW except <**outStep**>. The parameter <outStep> will be saved after AT^SMSO only. • The volume level as well as mute affects all audio modes. • In case of audio mode 1 the parameter <**outStep**> has no effect. • CAUTION! When you adjust audio parameters avoid exceeding the maximum allowed level. Bear in mind that exposure to excessive levels of noise can cause physical damage to users!

www.sendsms.cn

6.24 AT^SNFS Select audio hardware set

Test command AT^SNFS=?	Response **^SNFS**: (list of supported <**audMode**>s) **OK** Parameter See write command
Read command AT^SNFS?	Response **^SNFS: <audMode> OK** Parameter See write command
Write command AT^SNFS= <audMode>	The write command serves to set the audio mode required for the connected equipment. Please note that the selected mode is not saved to the non-volatile store and needs to be restored manually, if the GSM engine was powered down. Response **OK** If error is related to ME functionality: + **CME ERROR: <error>** Parameters <**audMode**> 1 Audio mode 1: Standard mode optimized for the default handset, that can be connected to the analog interface 1 (see your "Hardware Interface Description" for information on this handset.) To adjust the volume use the knob of the default handset. This handset can be used in audio mode 4 with user defined parameters. Note: The default parameters are determined for type approval and are not adjustable with AT commands. 2 Audio mode 2: Customer specific mode for a basic handsfree device (Siemens Car Kit Portable) connected to the analog interface 2. Audio parameters can be adjusted with AT commands 3 Audio mode 3: Customer specific mode for a mono-headset that connects to the analog interface 2. Audio parameters can be adjusted with AT commands. 4 Audio mode 4: Customer specific mode for a user handset that connects to the analog interface 1. Audio parameters can be adjusted with AT commands. 5 Audio mode 5: Customer specific mode intended for the analog interface 1. Audio parameters can be adjusted with AT commands. 6 Audio mode 6: Customer specific mode intended for the analog interface 2. Audio parameters can be adjusted with AT commands.
Reference Siemens	Note

www.cendams.cn

6.25 AT^SNFV Set loudspeaker volume

Test command AT^SNFV=?	Response ^**SNFV**: (list of supported <**outStep**>s) **OK** Parameter See write command
Read command AT^SNFV?	Response **^SNFV: <outStep>** **OK** Parameter See write command
Write command AT^SNFV=<outStep>	Response TA sets the volume of the loudspeaker to the value <**outCalibrate**> addressed by <**outStep**>. **OK** Parameter <**outStep**> Volume range 0 to 4
Reference Siemens	Note • Read and write commands are related to the active audio mode. • The changes are allowed in audio modes 2 to 6. • <**outStep**> can be changed by AT^SNFO, too. • <**outCalibrate**> can be changed by AT^SNFO. • AT^SNFW does not save the changed <**outStep**> value. The setting will be saved when you switch off the module with AT^SMSO.

www.sendsms.cn

6.26 AT^SNFW Write audio setting in non-volatile store

Test command AT^SNFW=?	Response **OK**
Execute command AT^SNFW	Response TA writes the active audio parameters in non-volatile store related to the active mode. **OK** If error is related to ME functionality: **+ CME ERROR: <error>** <**error**> memory failure Flash write error
Reference Siemens	Note • Execute command works only in audio mode 2 to 6. • TA writes the following audio parameter values in non-volatile store: **<inBbcGain>, <inCalibrate>, <outBbcGain>, <outCalibrate[0]> ... <outCalibrate[4]>, <side Tone>**

6.27 AT^SPBC Search the first entry in the sorted telephone book

Test command AT^SPBC=?	Response **^SPBC:** (list of sorted telephone books supported <**mem**>**s**) See **AT+CPBS/AT^SPBS** **OK/ERROR/+CME ERROR**
Write command AT^SPBC=<char>	Parameter <**char**> First letter of searched entry <**index**> Index in the sorted telephone book (access via AT^SPBG)
	Response **^SPBC: <index>** **OK/ERROR/+CME ERROR**
Reference Siemens	Note There is no difference between small and capital letters.

www.sendsms.cn

6.28 AT^SPBG Read entry from active telephone book via sorted index

This command sorts the active phonebook records by name, in alphabetical order. Please note that the alphabetical order is assigned an index of its own which is *not identical with the location numbers used in the various phonebooks*.

CAUTION: The AT^SBPG command is *intended for reading only*. For example, it helps you find entries starting with matching characters. However, do not use the listed index numbers to dial out or modify entries.

Test command AT^SPBG=?	Response **^SPBG:** (list of used <**index**>**s),** <**nlength**>**,** <**tlength**> **OK/ERROR/+CME ERROR**
	Parameter <**index**> Total number of entries stored in the active phonebook; displayed as a range of serial numbers (1 – n). <**nlength**> Max. length of phone number <**tlength**> Max. length of the text associated with the phone number
Execute command AT^SPBG= <index1> [, <index2>]	Response **^SPBG: <index1>, <number>, <type>, <text>[<CR><CL>** **^SPBG: .....** **^SPBG: <index2>, <number>, <type>, <text>]** **OK/ERROR/+CME ERROR**
	Parameter <**index1**> Serial number assigned to the position in the alphabetical list where reading of entries starts <**index2**> Serial number assigned to the position in the alphabetical list where reading of entries ends <**number**> Phone number <**type**> Type of phone number <**text**> Text associated with phone number
Reference Siemens	Note The AT^SPBG feature is able to sort by the first *6 matching characters* only. All the following characters will be ignored.
Example	1. First, run the *Test command* to find out the range of phonebook entries stored in the active phonebook: AT^SPBG=? TA returns the number of entries in the format: ^SPBG: (1-33),20,17 where 33 is the total number of entries. 2. Now, run the *Execute command* to display the phonebook entries by alphabetical order. It is recommended to enter the full range to obtain best results. AT^SPBG=1,33 TA returns phonebook entries by alphabetical order: ^SPBG: 1,"+999999",145,"Arthur" ^SPBG: 2,"+777777",145,"Bill" ^SPBG: 3,"+888888",145,"Charlie" ..... The numbers at the beginning of each line are not the memory locations in the phonebook, but only serial numbers assigned to the alphabetical list.

www.sendsms.cn

6.29 AT^SPBS Steps the selected phonebook alphabetically

This command can be used to flick through the active phonebook records in alphabetical order by name.

CAUTION: The AT^SBPS command is *intended for reading only*. For example, it helps you find entries starting with matching characters. However, do not use the listed index numbers to dial out or modify entries.

Test command AT^SPBS=?	Response ^SPBS: (list of supported <value>s) **OK** Parameter See write command
Write command AT^SPBS=<value>	Parameter <**value**> 1 to make a step downward in the alphabetically sorted phonebook 2 to make a step upward in the alphabetically sorted phonebook Response If <**value**>=1 TA steps down one entry. ^**SPBS:** <**index2**>,<**number**>,<**type**>,<**text**> <CR,LF> ^**SPBS:** <**index3**>,<**number**>,<**type**>,<**text**> <CR,LF> ^**SPBS:** <**index4**>,<**number**>,<**type**>,<**text**> <CR,LF>,<CR,LF> **OK** If <**value**>=2 (after <**value**>=1) TA steps up one entry. ^**SPBS:** <**index1**>,<**number**>,<**type**>,<**text**> <CR,LF> ^**SPBS:** <**index2**>,<**number**>,<**type**>,<**text**> <CR,LF> ^**SPBS:** <**index3**>,<**number**>,<**type**>,<**text**> <CR,LF>,<CR,LF> **OK** If error is related to ME functionality: **+CME ERROR:** <**err**> The response parameters are explained in the specification of the “AT^SPBG” command.
Reference Siemens	Note This command can be used for the ME, SM and FD phonebook.

www.sendsms.cn

6.30 AT^SPIC Display PIN counter

Test command AT^SPIC=?	Response **OK** If error is related to ME functionality: **+CME ERROR: <err>** Parameter
Execute command AT^SPIC	TA returns the number of attempts still available for entering a required password, e.g. the PIN, PUK, PH-SIM PUK etc. To check whether or not you need to enter a password use the “AT+CPIN?” command. Response **^SPIC: <counter> OK** If error is related to ME functionality: **+CME ERROR: <err>** Parameter <**counter**> Number of attempts counted down after each failure.
Reference Siemens	Note • When entering the SIM PIN or PUK you have a maximum of three attempts to enter each number. • For passwords associated to the phone lock ("PS" lock set by client or factory) or other factory set locks, such as "PF", "PN", "PU", "PP", "PC" the number of attempts is subject to a timing algorithm explained in Chapter 4.31.1. If these passwords are incorrectly entered the counter first returns 3, 2 and 1 remaining attempt(s), but then gives the total number of attempts which amounts to 63 (see example below). • See also Chapters 4.18, 4.31 4.32, 4.34, 6.13 for further information on locks and passwords. •

Example	Though a mobile is locked to a specific SIM card (phone lock), the client attempts to operate it with another SIM card. The client correctly enters the SIM PIN of the SIM card currently inserted, but then fails to give the "PS" lock password (PH-SIM PUK):
	
	`at+cpin=9999`
	`OK`
	`at+cpin?`
	`+CPIN: PH-SIM PIN` ME is waiting for the phone lock password
	`OK`
	
	`at^spic`
	`^SPIC: 3`
	`OK`
	
	`at+cpin=4711`
	`+CME ERROR: PH-SIM PIN required`
	
	`at+cpin=4712`
	`+CME ERROR: incorrect password`

www.sendsms.cn

```
at^spic
^SPIC: 1
OK

at+cpin=4713
+CME ERROR: incorrect password
at^spic
^SPIC: 63
OK

at+cpin=4714
+CME ERROR: incorrect password
at^spic
^SPIC: 63
```

www.sendsms.cn

6.31 AT^SPLM Read the PLMN list

Test command AT^SPLM=?	Response **OK** Parameter See execute command
Execute command AT^SPLM	Response TA returns the list of operator names from the ME. Each operator code <**numericn**> that has an alphanumeric equivalent <**alphan**> in the ME memory is returned. ^**SPLM:** numeric <**numeric1**>,long alphanumeric <**alpha1**><**CR**><**LF**> ^**SPLM:.....OK** If error is related to ME functionality: **+CME ERROR: <err>** Parameter <**numericn**> string type; operator in numeric form; GSM location area identification number <**alphan**> string type; operator in long alphanumeric format; can contain up to 16 characters
Reference Siemens	Note See also GSM 07.07: +COPN, +COPS

6.32 AT^SPLR Read entry from the preferred operators list

Test command AT^SPLR=?	Response TA returns the whole index range supported by the SIM. **^SPLR:** (list of supported <**index**>**s**) **OK** If error is related to ME functionality: **+CME ERROR: <err>** Parameter See write command
Write command AT^SPLR= <index1>[, <index2>]	Response TA returns used entries from the SIM list of preferred operators with <**index**> between <**index1**> and <**index2**>. If <**index2**> is not given, only entry with <**index1**> is returned. **^SPLR: <index1>, <oper>** **^SPLR: .....** **^SPLR: <index2>, <oper> OK** If error is related to ME functionality: **+CME ERROR: <err>** Parameter <**index1**> location number to read from <**index2**> location number to read to <**oper**> string type; operator in numeric form; GSM location area identification number
Reference Siemens	Note GSM 07.07: AT+CPOL

www.sendsms.cn

6.33 AT^SPLW Write an entry to the preferred operators list

Test command AT^SPLW=?	Response TA returns the whole index range supported by the SIM. **^SPLW**: (list of supported <**index**>**s**) **OK** If error is related to ME functionality: **+CME ERROR:** <**err**> Parameter See write command
Write command AT^SPLW=<index>[,<oper>]	Parameter TA writes an entry to the SIM list of preferred operators at location number <**index**>. If <**index**> is given but <**oper**> is left out, the entry is deleted. If <**oper**> is given but <**index**> is left out, <**oper**> is inserted in the next free location. <**index**> location number <**oper**> string type; operator in numeric form; GSM location area identification number Note: <**oper**> is a 5 digit number, 3 digits country code and 2 digits for the Network provider. Response **OK** If error is related to ME functionality: **+CME ERROR:** <**err**>
Reference Siemens	Note See also GSM 07.07: AT+CPOL

www.sendsms.cn

6.34 AT^SPWD Change password for a lock

Test command AT^SPWD=?	Response **^SPWD:** (list of supported **(<fac>, <pwdlength>)**s) **OK** If error is related to ME functionality: **+CME ERROR: <err>** Parameter **<fac>** "P2" PIN2 otherwise see write command without "FD" **<pwdlength>** integer, max. length of password
Write command AT^SPWD = <fac>, <oldp-wd>,<newpwd>	Parameter **<fac>** Phone security passwords "SC" SIM card (PIN) "P2" PIN 2 "PS" Phone locked to SIM (device code) Factory set locks "PF" lock Phone to the very first SIM card "PN" Network Personalisation "PU" Network subset Personalisation "PP" Service Provider Personalisation "PC" Corporate Personalisation Supplementary Service: Call barring "AO" BAOC (Bar All Outgoing Calls) "OI" BOIC (Bar Outgoing International Calls) "OX" BOIC-exHC (Bar Outgoing International Calls except to Home Country) "AI" BAIC (Bar All Incoming Calls) "IR" BIC-Roam (Bar Incoming Calls when Roaming outside the home country) "AB" All Barring services "AG" All outGoing barring services "AC" All inComing barring services Note: All call barring types have usually the same ME **<password>** to lock and unlock. The default **<password>** is supplied from the network provider. TA sets a new password for the facility lock function. **<oldpwd>** Password specified for the facility from the user interface or with command. Can be ignored if no old password was allocated to the facility. Take into account that a password may have already been set by factory, or that the service is subject to a password issued by the provider.

www.sendsms.cn

	See notes above or contact provider. if <fac> = “SC” then PIN if <fac> = “AO”...”AC” (barring) then network password if <fac> = “P2” then PIN2 <**newpwd**> new password Response **OK** If error is related to ME functionality: **+CME ERROR: <err>**
Reference Siemens	Note See also specification of AT+ CPWD in GSM 07.07 and further details in Chapter 4.34.

www.sendsms.cn

6.35 AT^SSYNC Configure SYNC Pin

The ^SSYNC command serves to configure the SYNC pin of the GSM engine's ZIF connector. Please note that the pin may be assigned different functions, depending on the design of the host application. TC35 Terminal supports only <**mode**>=**1**.

For detailed information on the SYNC pin refer to the "Hardware Interface Description" supplied with your GSM engine. Before changing the mode of the SYNC pin, carefully read the technical specifications.

Test command AT^SSYNC=?	Response **^SSYNC:** (list of supported <**mode**>s) **OK** Parameter: See write command
Read command AT^SSYNC?	Response **+SSYNC:** <**mode**> **OK** Parameter: See write command
Write command AT^SSYNC= <mode>	Response **OK** Parameter <**mode**> 0 *TC35 / TC37 module*: Enables the SYNC pin to indicate growing power consumption during a transmit burst. You can make use of the signal generated by the SYNC pin, if power consumption is your concern. To do so, ensure that your application is capable of processing the signal. Your platform design must be such that the incoming signal causes other components to draw less current. In short, this allows your application to accomodate current drain and thus, supply sufficient current to the GSM engine if required. *TC35 Terminal:* not applicable (do not select mode 0). 1 Enables the SYNC pin to control a status LED. On the *TC35 Terminal*, this is the LED placed on the front panel. If you use the *TC35 or TC37 module,* the SYNC pin can control an LED installed in your application. The options described below are applicable both to the module and the terminal. Note: Mode 1 is the default mode for the TC35 Terminal. Operating modes of the ME indicated to the user (if <**mode**> = 1): **LED** — **ME Mode** Off — *TC35 / TC37 module:* ME is off or running in SLEEP, Alarm or Charge-only mode. *TC35 Terminal:* ME is off or in SLEEP mode. 600ms On / 600ms Off — No SIM card inserted, or no PIN entered, or network search in progress, or ongoing user authentication, or network login in progess. 75ms High / 3s Low — Logged to a network (therefore monitoring control channels and user interactions), but no call in progress. On — *Voice call:* Connected to remote party. *Data call:* Connected to remote party or exchange of parameters between both parties while setting up or disconnecting a call.
Note	The SYNC pin mode is stored to the non-volatile Flash memory, and thus retained after Power Down.

www.sonderne.cn

6.36 AT^STCD Display Total Call Duration

Test command AT^STCD=?	Response **OK**
Execute command AT^STCD	Response TA returns total call duration (accumulated duration of all calls) **^STCD: <time> OK** Parameter **<time>** string type value; format is "hh:mm:ss", where characters indicate hours, minutes, seconds; E.g. 22:10:00 “22:10:00" max value is 9999:59:59
Reference Siemens	Note The Total Call Duration will not be reset by power off or other means.

www.sendsms.cn

7 APPENDIX

7.1 Summary of ERRORS and Messages

The final result codes **+CME ERROR:** <**err**> and **+CMS ERROR:** <**err**> indicate errors related to mobile equipment or network. The effect is similar to an **ERROR** result code.

A final result error code terminates the execution of the command and prevents the execution of all remaining commands that may follow on the same command line. If so, neither **ERROR** nor **OK** result code are returned.

The format of <**err**> can be either numeric or verbose. This is set with the AT+CMEE command (see Chapter 4.22).

7.1.1 Summary of CME ERRORS related to GSM 07.07

www.sendsms.cn

Code of <err>	Meaning
0	phone failure
1	no connection to phone
2	phone-adapter link reserved
3	Operation not allowed
4	Operation not supported
5	PH-SIM PIN required
6	PH-FSIM PIN required
7	PH-FSIM PUK required
10	SIM not inserted
11	SIM PIN required
12	SIM PUK required
13	SIM failure
14	SIM busy
15	SIM wrong
16	Incorrect password
17	SIM PIN2 required
18	SIM PUK2 required
20	Memory full
21	invalid index
22	not found
23	Memory failure
24	text string too long
25	invalid characters in text string
26	dial string too long
27	invalid characters in dial string
30	no network service
31	Network timeout
32	Network not allowed emergency calls only
40	Network personalization PIN required
41	Network personalization PUK required
42	Network subset personalization PIN required

Code of <err>	Meaning
43	Network subset personalization PUK required
44	service provider personalization PIN required
45	service provider personalization PUK required
46	Corporate personalization PIN required
47	Corporate personalization PUK required
48	PH-SIM PUK required (PH-SIM PUK may also be referred to as Master Phone Code. For further details see Chapters 4.18.2 and 4.31.1)
100	Unknown
256	Operation temporarily not allowed
257	call barred
258	phone is busy
259	user abort
260	invalid dial string
261	ss not executed
262	SIM blocked

Note: Values below 256 are reserved.

www.sendsms.cn

7.1.2 Summary of CMS ERRORS related to GSM 07.05

Code of <err>	Meaning
1	Unassigned (unallocated) number
8	Operator determined barring
10	Call barred
21	Short message transfer rejected
27	Destination out of service
28	Unidentified subscriber
29	Facility rejected
30	Unknown subscriber
38	Network out of order
41	Temporary failure
42	Congestion
47	Resources unavailable, unspecified
50	Requested facility not subscribed
69	Requested facility not implemented
81	Invalid short message transfer reference value
95	Invalid message, unspecified
96	Invalid mandatory information
97	Message type non-existent or not implemented
98	Message not compatible with short message protocol state
99	Information element non-existent or not implemented
111	Protocol error, unspecified
127	Interworking, unspecified
128	Telematic interworking not supported
129	Short message Type 0 not supported
130	Cannot replace short message
143	Unspecified TP-PID error
144	Data coding scheme (alphabet) not supported
145	Message class not supported
159	Unspecified TP-DCS error
160	Command cannot be actioned
161	Command unsupported
175	Unspecified TP-Command error
176	TPDU not supported
192	SC busy
193	No SC subscription
194	SC system failure
195	Invalid SME address
196	Destination SME barred
197	SM Rejected-Duplicate SM
198	TP-VPF not supported
199	TP-VP not supported
208	D0 SIM SMS storage full
209	No SMS storage capability in SIM
210	Error in MS
211	Memory Capacity Exceeded
212	SIM Application Toolkit Busy

www.sendsms.cn

Code of <err>	Meaning
213	SIM data download error
255	Unspecified error cause
300	ME failure
301	SMS service of ME reserved
302	Operation not allowed
303	Operation not supported
304	Invalid PDU mode parameter
305	Invalid text mode parameter
310	SIM not inserted
311	SIM PIN required
312	PH-SIM PIN required
313	SIM failure
314	SIM busy
315	SIM wrong
316	SIM PUK required
317	SIM PIN2 required
318	SIM PUK2 required
320	Memory failure
321	Invalid memory index
322	Memory full
330	SMSC address unknown
331	no network service
332	Network timeout
340	NO +CNMA ACK EXPECTED
500	Unknown error
512	User abort
513	unable to store
514	invalid status
515	invalid character in address string
516	invalid length
517	invalid character in pdu
518	invalid parameter
519	invalid length or character
520	invalid character in text
521	timer expired

www.sendsms.cn

7.1.3 Summary of Unsolicited Result Codes (URC)

A URC is a report message sent from the ME to the TE. An unsolicited result code can either be delivered automatically when an event occurs or as a result of a query the ME received before. However, a URC is not issued as a *direct* response to an executed AT command.

When sending a URC the ME activates its Ring Line (Logic "0"), i.e. the line goes active low for 1 second.

Typical URCs may be information about incoming calls, received SMS, changing temperature, status of the battery etc. A summary of all URCs is listed below.

For each of these messages, you can configure the ME whether or not to send an unsolicited result code. Remember that the presentation mode of URCs will be reset to the default values

- when you power down the GSM engine, e.g. with AT^SMSO or when disconnecting power supply,
- when you reset the engine with AT+CFUN=1,1
- when you restore the factory settings with AT&F.

To take advantage of the messages, you need to activate the desired URC every time you reboot the GSM engine or have the parameters included in the user profile saved with AT&W. If you do so, take into account that the two URCs ^SBC and ^SCTM cannot be saved with the user profile and, thus, need to be reactivated when needed after reboot.

The URCs SYSSTART, SYSSTART CHARGE-ONLY MODE and SYSSTART ALARM mode are not user definable.

www.sendsms.cn

Message	Meaning	How to activate URC
+CCCM: <ccm>	Current call meter value	AT^CACM=1
+CREG: <stat>[,<lac>,<ci>]	Registration to ME network changed	AT+CREG=1 or AT+CREG=2
+CRING: <type>	Indication of an incoming call	AT+CRC=1
+CLIP: <number>, <type>	Telephone number of caller	AT+CLIP=1
+CMTI:<mem>,<index>	Indication of a new short message (text and PDU mode)	AT+CNMI=1,1
+CMT:,<length><CR><LF><pdu>	Short message is output directly to the TE (in PDU mode)	Example: AT+CNMI=1,2
+CMT:<oa>,,<scts>[,<tooa>,<fo>, <pid>,<dcs>,<sca>,<tosca>, <length>]<CR><LF><data>	Short message is output directly to the TE (in text mode)	Example: AT+CNMI=1,2
+CBM:<sn>,<mid>,<dcs>,<page>, <pages><CR> <LF><data>	Cell broadcast message is output directly to the TE (in text mode)	Example: AT+CNMI=1,0,2
+CBM: <length><CR><LF><pdu>	Cell broadcast message is output directly to the TE (in PDU mode)	Examples: AT+CNMI=1,0,2
+CDS: <length><CR><LF><pdu> +CDS: <fo>,<mr>,[<ra>],[<tora>], <scts>,<dt>, <st>	SMS status report routed directly to TE (in PDU mode) SMS status report routed directly to TE (in text mode)	Example: AT+CNMI=1,0,0,1
+CDSI: <mem>,<index>	SMS status report routed ME/TA. Can be queried from the memory with location index number (text and PDU mode)	Example: AT+CNMI=1,0,0,2
+CSSI: <code1> +CSSU: <code2>	Supplementary service intermediate/unsolicited result code	AT+CSSN=1,1
^SMGO: <mode>	SMS overflow indicator	AT^SMGO=1
^SCKS: <m>	Indicates whether card has been removed or inserted	AT^SCKS=1

Message	Meaning	How to activate URC
^SCTM_A: <m> ^SCTM_B: <m>	Battery (A) or board (B) is close to or beyond critical temperature limit. URC is issued repeatedly. If <m>=2 or <m>-2, ME switches off.	AT^SCTM=1
^SBC: Undervoltage	Undervoltage of battery detected. ME will be switched off within a minute.	AT^SBC=<current>
^SYSSTART	Indicates that ME has successfully been started. Note that this URC will not appear if autobauding is enabled.	Not defined by user
^SYSSTART CHARGE-ONLY MODE	Only applicable to battery operated MEs: URC indicates that ME has entered the Charge-only mode. Charge-only mode allows charging while ME is detached from network. Limited number of AT commands is accessible. Mode can be launched by connecting the battery charger to the POWER pins of the ZIF connector, before or after powering down ME with AT^SMSO. Note that this URC will not appear if autobauding is enabled.	Not defined by user
^SYSSTART ALARM MODE or, if individual text available: ^SYSSTART ALARM MODE +CALA: <text>	Indicates that ME has entered Alarm mode. RTC alert set with the AT+CALA command. Executed when ME has been powered down. Causes ME to wake up from Power Down mode. Preventing ME from unintentionally registering to the network, Alarm mode allows limited operation. Limited number of AT commands is accessible. Do not confuse with wake-up or reminder call. Note that this URC will not appear if autobauding is enabled.	Enabled when you configure Alarm mode
+CALA: <text>	Wake-up or reminder call set with AT+CALA command. Executed while ME is in normal operation. Do not confuse with Alarm mode.	Enabled when you set wake-up call

www.sf-gsm.cn

7.1.4 Result codes

Indication	Numeric	Meaning
OK	0	Command executed, no errors, Wake up after reset
CONNECT	1	Link established
RING	2	Ring detected
NO CARRIER	3	Link not established or disconnected
ERROR	4	Invalid command or command line too long
NO DIALTONE	6	No dial tone, dialling impossible, wrong mode
BUSY	7	Remote station busy
CONNECT 2400	10	Link with 2400 bps
CONNECT 4800	30	Link with 4800 bps
CONNECT 9600	32	Link with 9600 bps
CONNECT 2400/RLP	47	Link with 2400 bps and Radio Link Protocol
CONNECT 4800/RLP	48	Link with 4800 bps and Radio Link Protocol
CONNECT 9600/RLP	49	Link with 9600 bps and Radio Link Protocol
ALERTING		Alerting at called phone
DIALING		Mobile phone is dialing

7.1.5 Cause Location ID for the extended error report (AT+CEER)

ID	Description
0	No error (default)
1	SIEMENS L2 cause
2	GSM cause for L3 Radio Resource Sublayer (GSM 04.08 annex F)
3	SIEMENS cause for L3 Radio Ressource Sublayer
4	GSM cause for L3 Mobility Management (GSM 04.08 annex G)
5	SIEMENS cause for L3 Mobility Management
6	GSM cause for L3 Mobility Management via MMR-SAP (GSM 04.08 annex G)
7	SIEMENS cause for L3 Mobility Management via MMR-SAP
8	GSM cause for L3 Call Control (GSM 04.08 10.5.4.11 and annex H)
9	SIEMENS cause for L3 Call Control
11	SIEMENS cause for L3 Advice of Charge Entity
12	GSM cause for L3 SMS CP Entity
13	SIEMENS cause for L3 SMS CP Entity
14	GSM cause for L3 SMS RL Entity
15	SIEMENS cause for L3 SMS RL Entity
16	GSM cause for L3 SMS TL Entity
17	SIEMENS cause for L3 SMS TL Entity
18	SIEMENS cause for DSM Entity
21	GSM cause for L3 Call-related Supplementary Services
22	SIEMENS cause for L3 Call-related Supplementary Services
32	SIEMENS cause for Supplementary Services Entity
33	SIEMENS cause for Supplementary Services Manager
34	Network cause for Supplementary Services (GSM 04.08 10.5.4.11 and annex H)
35	Supplementary Services network error (GSM 04.80 3.6.6)
50	GSM cause for Session Management (GSM 04.08 annex I)
51	SIEMENS cause for Session Management
128	Supplementary Services general problem (GSM 04.80 3.6.7)

www.sendsms.cn

129	Supplementary Services invoke problem (GSM 04.80 3.6.7)
130	Supplementary Services result problem (GSM 04.80 3.6.7)
131	Supplementary Services error problem (GSM 04.80 3.6.7)
242	SIEMENS cause for Link Management

7.1.6 GSM release cause for L3 Radio Resource (RR) (AT+CEER)

Number	Description
0	Normal event
1	Abnormal release, unspecified
2	Abnormal release, channel unacceptable
3	Abnormal release, timer expired
4	Abnormal release, no activity on the radio path
5	Pre-emptive release
8	Handover impossible, timing advance out of range
9	Channel mode unacceptable
10	Frequency not implemented
65	Call already cleared
95	Semantically incorrect message
96	Invalid mandantory information
97	Message type non-existent or not implemented
98	Message type not compatible with protocol state
100	Conditional information element error
101	No cell allocation available
111	Protocol error unspecified

www.sendsms.cn

7.1.7 SIEMENS release cause for L3 Radio Resource (RR) (AT+CEER)

Number	Description
1	Racchs not answered
2	Racchs rejected
3	Access class of the SIM is barred by the network provider
4	SABM failure
5	Radio link counter expiry or PerformAbnormalRelease
6	Confirm ABORT of the MM
7	Respond to DEACT_REQ
8	Loss of coverage
9	Reestablishment not possible

7.1.8 GSM release cause for L3 Mobility Management (MM) (AT+CEER)

Number	Description
Causes related to MS identification	
2	IMSI unknown in HLR
3	Illegal MS
4	IMSI unknown in VLR
5	IMEI not accepted
6	Illegal ME
Cause related to subscription options	
11	PLMN not allowed
12	Location Area not allowed
13	Roaming not allowed in this location area
Causes related to PLMN specific network failures and congestion	
17	Network failure
22	Congestion
Causes related to nature of request	
32	Service option not supported
33	Requested service option not subscribed
34	Service option temporarily out of order
38	Call cannot be identified
Causes related to invalid messages	
95	Semantically incorrect message
96	Invalid mandantory information
97	Message type non-existent or not implemented
98	Message not compatible with protocol state
99	Information element non-existent or not implemented
100	Conditional information element error
101	Messages not compatible with protocol state
111	Protocol error, unspecified

www.sendsms.cn

7.1.9 SIEMENS release cause for L3 Mobility Management (MM) (AT+CEER)

Number	Description
1	No SIM available
8	No MM connection
9	Authentification failure
11	MM performs detach
17	The registration failed and will be re-attempted in a short term
18	The CM connection establishment failed
19	The registration failed and will be re-attempt in a long term
20	The RR connection is released
21	The MS tries to register
22	The SPLMN is not available
23	An MTC is in progress
24	A PLMN scan is in progress

7.1.10 GSM release cause for L3 Call Control (CC) (AT+CEER)

Number	Description
Normal class	
1	Unassigned (unallocated) number
3	No route to destination
6	Channel unacceptable
8	Operator determined barring
16	Normal call clearing
17	User busy
18	No user responding
19	User alerting, no answer
21	Call rejected
22	Number changed
25	Pre-emption
26	Non-selected user clearing
27	Destination out of order
28	Invalid number format (incomplete number)
29	Facility rejected
30	Response to STATUS ENQUIRY
31	Normal, unspecified
Resource unavailable class	
34	No circuit/channel available
38	Network out of order
41	Temporary failure
42	Switching equipment congestion
43	Access information discarded
44	Requested circuit/channel not available
47	Resource unavailable, unspecified
Service or option not available class	
49	Quality of service unavailable
50	Requested facility not subscribed
55	Incoming calls barred within the CUG
57	Bearer capability not authorized
58	Bearer capability presently not available
63	Service or option not available, unspecified
Service or option not implemented	
65	Bearer service not implemented
68	ACM equal or greater than ACMmax
69	Requested facility not implemented
70	Only restricted digital information bearer capability is available
79	service or option not implemented, unspecified
Invalid message (e.g. parameter out of range) class	
81	Invalid transaction identifier value
87	User not member of CUG
88	Incompatible destination
91	Invalid transit network selection
95	Semantically incorrect message

www.sendsms.cn

Number	Description
Protocol error (e.g. unknown message) class	
96	Invalid mandantory information
97	Message type non-existant or not implemented
98	Message type not comaptible with protocol state
99	Information element non-existent or not implemented
100	Conditional information element error
101	Message not compatible with protocol
102	Recovery on timer expiry
111	Protocol error, unspecified
Interworking class	
127	Interworking, unspecified

7.1.11 SIEMENS release cause for L3 Call Control (CC) and Mobile Station Manager (MSM) (AT+CEER)

Number	Description
1	Call dropped
2	Service not available
3	Hold procedure not available
4	Temporary no service, previous procedure not yet finished
5	No speech service available
6	Call reestablishment procedure active
7	Mobile received a release (complete) message during a modify procedure (modify reject)
8	Call clearing, because loss of radio connection, if no reestablishment is allowed (call not active)
10	Number not included in FDN list

www.sendsms.cn

7.1.12 SIEMENS release cause for L3 Advice of Charge (AOC) (AT+CEER)

Number	Description
1	SIM data not available
2	SIM does not support AOC
3	SIM data access error
4	ACM limit almost reached ACM range overflow
5	ACM range overflow

7.1.13 GSM Release cause for Supplementary Service call (AT+CEER)

Number	Description
0	No error (default)
1	UnknownSubscriber
9	IllegalSubscriber
10	BearerServiceNotProvisioned
11	TeleserviceNotProvisioned
12	IllegalEquipment
13	CallBarred
15	CUGReject
16	IllegalSSOperation
17	SSErrorStatus
18	SSNotAvailable
19	SSSubscriptionViolation
20	SSIncompatibility
21	FacilityNotSupported
27	AbsentSubscriber
29	ShortTermDenial
30	LongTermDenial
34	SystemFailure
35	DataMissing
36	UnexpectedDataValue
37	PWRegistrationFailure
38	NegativePWCheck
43	NumberOfPWAttemptsViolation
71	UnknownAlphabet
72	USSDBusy
126	MaxNumsOfMPTYCallsExceeded
127	ResourcesNotAvailable
General Problem Codes	
300	Unrecognized Component
301	Mistyped Component
302	Badly Structured Component
Invoke Problem Codes	
303	Duplicate Invoke ID
304	Unrecognized Operation
305	Mistyped Parameter

www.sendsms.cn

Number	Description
306	Resource Limitation
307	Initiating Release
308	Unrecognized Linked ID
309	Linked Response Unexpected
310	Unexpected Linked Operation
Return Result Problem Codes	
311	Unrecognize Invoke ID
312	Return Result Unexpected
313	Mistyped Parameter
Return Error Problem Codes	
314	Unrecognized Invoke ID
315	Return Error Unexpected
316	Unrecognized Error
317	Unexpected Error
318	Mistyped Parameter

www.sendsms.cn

7.1.14 SIEMENS release cause for Call-related Supplementary Services (CRSS) (AT+CEER)

Number	Description
0	ECT procedure failed (timer expired)
1	Call has been cleared without receiving an answer to ECT request
2	Initial conditions not fulfilled (one active, one held call)
3	Received “return error”
4	Call has been cleared without receiving an answer to CCBS request
5	Initial conditions for CCBS not fulfilled (Idle CRSS)

7.2 Summary of PIN requiring AT Commands

The following table lists all the AT commands that are available after the PIN was entered.

AT command	Required PIN
Standard V25.ter AT commands	
ATA	PIN 1
ATD	PIN 1
ATH	PIN 1
AT+ILRR	PIN 1
AT+VTS	PIN 1
AT commands originating from GSM 07.07	
AT+CACM	PIN 1, PIN 2
AT+CAMM	PIN 1, PIN 2
AT+CAOC	PIN 1
AT+CCFC	PIN 1
AT+CEER	PIN 1
AT+CHLD	PIN 1
AT+CHUP	PIN 1
AT+CIMI	PIN 1
AT+CLCC	PIN 1
AT+CLCK	PIN 1
AT+CLIP read	PIN 1
AT+CLIR	PIN 1
AT+CMGC	PIN 1
AT+CMGD	PIN 1
AT+CMGL	PIN 1
AT+CMGR	PIN 1
AT+CMGS	PIN 1
AT+CMGW	PIN 1
AT+CMSS	PIN 1
AT+CNMA	PIN 1
AT+CNMI	PIN 1
AT+COPN	PIN 1
AT+CPBR	PIN 1
AT+CPBS	PIN 1
AT+CPBW	PIN 1
AT+CPMS	PIN 1
AT+CPUC	PIN 1, PIN 2
AT+CPWD	PIN 1, PIN 2
AT+CR	PIN 1
AT+CRSM	PIN 1
AT+CSCA	PIN 1
AT+CSCB	PIN 1
AT+CSDH	PIN 1
AT+CSMP	PIN 1
AT+CSMS	PIN 1
AT+CUSD	PIN 1

www.sendsms.cn

AT command	Required PIN
Siemens defined AT commands	
AT+CXXCID	PIN 1
AT^MONP	PIN 1
AT^MONI	PIN 1
AT^SACM	PIN 1, PIN 2
AT^BLK	PIN 1
AT^SCID	PIN 1
AT^SCNI	PIN 1
AT^SDLD	PIN 1
AT^SLCD	PIN 1
AT^SLCK	PIN 1
AT^SMGL	PIN 1
AT^SMGO	PIN 1
AT^SMGR	PIN 1
AT^SPBC	PIN 1
AT^SPBG	PIN 1
AT^SPBS	PIN 1
AT^SPLM	PIN 1
AT^SPLR	PIN 1
AT^SPLW	PIN 1
AT^SPWD	PIN 1, PIN 2
AT^STCD	PIN 1

www.sendsms.cn

7.3 AT commands available before entering the SIM PIN

The following table summarizes the AT commands you can use before the SIM PIN has been entered.

Explanation:

- ● AT command usable without PIN
- --- not usable without PIN
- n.a. AT command not available at all

AT command	Test	Read	Write / Execute	Note
Standard V.25ter AT commands				
ATD	n.a.	n.a	●	For emergency calls only
ATE	n.a.	n.a	●	
ATI	n.a.	n.a	●	
ATO	n.a.	n.a	●	
ATQ	n.a.	n.a	●	
ATS3	n.a.	●	●	
ATS4	n.a.	●	●	
ATS5	n.a.	●	●	
AT\Q	n.a.	n.a.	●	
ATSn	n.a.	●	●	
ATS18	●	n.a	●	
ATV	n.a.	n.a	●	
ATX	n.a.	n.a	●	
ATZ	n.a.	n.a	●	
AT&C	n.a.	n.a	●	
AT&D	n.a.	n.a	●	
AT&F	n.a.	n.a	●	
AT&V	n.a.	n.a	●	
AT+IPR	●	●	●	
AT commands originating from GSM 07.07				
AT+CALA	●	●	●	
AT+CBST	●	●	●	
AT+CCLK	●	●	●	
AT+CFUN	●	●	●	
AT+CGMI	●	n.a.	●	
AT+CGMM	●	n.a.	●	
AT+CGMR	●	n.a.	●	
AT+CGSN	●	n.a.	●	
AT+CLIP	●	---	●	
AT+CLVL	●	●	●	Write command in audio mode 2-6 only
AT+CMEE	●	●	●	
AT+CMGF	●	●	●	
AT+CMUT	●	●	●	Write command depending on audio mode
AT+CMUX	●	●	Error	Only mode 0
AT+COPS	Phone busy	Unknown	---	Not useful without PIN

www.sendsms.cn

AT command	Test	Read	Write / Execute	Note
AT+CPAS	●	n.a.	●	Only 0
AT+CPIN	●	●	●	
AT+CPIN2	●	●	●	
AT+CR	●	●	●	
AT+CRC	●	●	●	
AT+CREG	●	●	●	
AT+CRLP	●	●	●	
AT+CSCS	●	●	●	
AT+CSNS	●	●	●	
AT+CSQ	●	---	●	
AT+CSSN	●	●	●	
AT+GCAP	●	n.a.	●	
AT+GMI	●	n.a.	●	
AT+GMM	●	n.a.	●	
AT+GMR	●	n.a.	●	
AT+GSN	●	n.a.	●	
AT+VTD	●	●	●	
AT+WS46	●	●	●	12 (GSM digital cellular)
Siemens defined AT commands				
AT^SBC	●	●	●	
AT^SCKS	●	●	●	
AT^SCTM	●	●	●	
AT^SHOM	●		●	
AT^SMSO	●	●	●	
AT^SM20	●	●	●	
AT^SNFD	●	n.a.	●	
AT^SNFI	●	●	●	Write commd. in audio mode 2-6 only
AT^SNFM	●	●	●	Write commd. in audio mode 2-6 only
AT^SNFO	●	●	●	Write commd. in audio mode 2-6 only
AT^SNFS	●	●	●	
AT^SNFV	●	●	●	
AT^SNFW	●	n.a.	●	
AT^SPIC	●	n.a.	●	
AT^SSYNC	●	●	●	

www.sendsms.cn

7.4 Standard GSM service codes

The following GSM command strings can be sent with the ATD command. To do so, use the syntax ATD<n>.

<n>	Functionality	Possible response(s)
Phone security		
*#06#	Query IMEI	<IMEI> OK
**04*oldPIN*newPIN*newPIN#	Change PIN1	+CME ERROR: <err> / OK See also Chapters 4.18, 4.31, 4.31.1, 4.32.
**042*oldPIN2*newPIN2*newPIN2#	Change PIN2	
**05*unblKey*newPIN*newPIN#	Unlock PIN 1. (Unblock SIM card after 3 failed attempts to enter PIN1)	
**052*unblKey*newPIN*newPIN#	Unlock PIN2 (after 3 failed attempts to enter PIN2)	
[*]03[ZZ]*oldPw*newPw*newPw#	Registration of net password (change call barring password)	
Phone number presentation		
*#30#	Check status of CLIP	+CLIP : <n>,<m> OK (Chapter 4.19, p. 75)
*#31#	Check status of CLIR	+CLIR : <n>,<m> OK (Chapter 4.20, p.76)
*31#<Phonenumber>[;]	Suppress CLIR	(Chapter 4.20, p.76)
#31#<Phonenumber>[;]	Activate CLIR	(Chapter 4.20, p.76)
*#76#	Check status of "Connected line identification presentation"	+COLP: 0,<m> OK (where <m> = active or not active)
*#77#	Check status of "Connected Line Identification Restriction"	+COLR: 0,<m> OK (where <m> = active or not active)
Call forwarding (see also Chapter 7.4.1)		
(choice of *,#,*#,**,##)21*DN*BS#	Act/deact/int/reg/eras CFU	^SCCFC : <reason>, <status>, <class> [,...] like +CCFC (Chapter 4.6, p. 59)
(choice of *,#,*#,**,##)67*DN*BS#	Act/deact/int/reg/eras CF busy	
(choice of *,#,*#,**,##)61*DN*BS*T#	Act/deact/int/reg/eras CF no reply	
(choice of *,#,*#,**,##)62*DN*BS#	Act/deact/int/reg/eras CF no reach	
(choice of *,#,*#,**,##)002*DN*BS*T#	Act/deact/int/reg/eras CF all	
(choice of *,#,*#,**,##)004*DN*BS*T#	Act/deact/int/reg/eras CF all cond.	
Call waiting (see also Chapter 7.4.1)		
(choice of *,#,*#)43*BS#	Activation/deactivation/int WAIT	+CCWA: <status>, <class> *)
Call barring (see also Chapter 7.4.1)		
(choice of *,#,*#)33*Pw*BS#	Act/deact/int BAOC	^SCLCK: <fac>, <status>, <class> [, ...] like +CLCK *) (see Chapter 4.18, p. 69)
(choice of *,#,*#)331*Pw*BS#	Act/deact/int BAOIC	
(choice of *,#,*#)332*Pw*BS#	Act/deact/int BAOIC exc.home	
(choice of *,#,*#)35*Pw*BS#	Act/deact/int. BAIC	
(choice of *,#,*#)351*Pw*BS#	Act/deact/int BAIC roaming	
#330*Pw*BS#	Deact. All Barring Services	
#333*Pw*BS#	Deact. All Outg.Barring Services	
#353*Pw*BS#	Deactivation. All Inc.Barring Services	
Call Hold / Multiparty		
C[C] in call	Call hold and multiparty	+CME ERROR: <err> / OK (see Chapter 4.14, p. 66)
USSD messages		
[C]...[C]# (varies with the serving network)	Send USSD message	+CME ERROR: <err> / OK (see Chapter 4.44, p. 110)
C[C] (excluded 1[C]) (varies with the serving network)	Send USSD message	+CME ERROR: <err> / OK (see Chapter 4.44, p. 110)

www.sendsms.cn

Abbreviations and associated codes

ZZ = type of supplementary services:	Barring services	330
	All services	---
DN = dialling number:	String of digits 0-9	
BS = basic service:	Voice	11
	FAX	13
	SMS	16
	SMS +FAX	12
	Voice + FAX	19
	Voice + SMS + FAX	10
	Data circuit asyncron	25
	Data circuit syncron	24
	PAD	27
	Packet	26
	Data circuit asyncron + PAD	21
	Data circuit syncron + packet	22
	Data circuit asyncron + syncron. + PAD	20
	All Services	---
T = time in seconds		
PW = Password		
C = character of TE character set (e.g. asterix, hash or digit in case of USSD, or digits in case of held calls or multiparty calls)		

www.sendsms.cn

Function of *# codes

*	Activate
**	Register and activate
*#	Check status
#	Unregister
##	Unregister and deactivate

7.4.1 Additional notes on ^SCCFC, ^SCCWA, ^SCLCK

The output of ^SCCFC, ^SCCWA, ^SCLCK depends on the teleservices coded in <class>. If no teleservice or bearer service is active for a given interrogation “7” is generated as default value for the <class> parameter, with only line being displayed (see example 1 below). If a service is activated for one or several classes, only the active classes will be displayed (see example 2).

The number of parameters displayed in the ^SCCFC and ^SCLCK output strings differs from the equivalent +CCFC and +CLCK output strings: In contrast to the +CCFC string, ^SCCFC also includes the <reason>. Likewise, the ^SCLCK string includes aditionally <fac>.

Example 1	When you check the call forwarding status for all classes, while none is active the following responses will be displayed:
	
	Using `at+ccfc=0,2`
	`+CCFC: 0,1`
	`+CCFC: 0,2`
	`+CCFC: 0,4`
	`OK`
	
	Using `atd*#21#`
	`^SCCFC: 0,0,7`
	`OK`

Example 2	To register and activate unconditional call forwarding for voice calls:
	`at+ccfc=0,3,0301234567,129,1`
	`OK`
	
	To check the status of all call forwarding services using ATD (only active class will be displayed):
	`atd*#21#`
	`^SCCFC: 0,1,1,"+493038639839",145`
	`OK`
	
	To check the status of all call forwarding services using AT+CCFC (all classes will be displayed)
	`at+ccfc=0,2`
	`+CCFC: 1,1,"+493038639839",145`
	`+CCFC: 0,2`
	`+CCFC: 0,4`
	`OK`

www.sendsms.cn

7.5 Alphabet tables

This section provides tables for the special GSM 03.38 alphabet supported by the ME (see chapter „Supported character sets“, pg 9).

Character table of default GSM 03.38 alphabet (7 Bits per character):				b7	0	0	0	0	1	1	1	1
				b6	0	0	1	1	0	0	1	1
				b5	0	1	0	1	0	1	0	1
b4	b3	b2	b1		0	1	2	3	4	5	6	7
0	0	0	0	0	@	Δ	SP	0	¡	P	¿	p
0	0	0	1	1	£	_	!	1	A	Q	a	q
0	0	1	0	2	$	Φ	„	2	B	R	b	r
0	0	1	1	3	¥	Γ	#	3	C	S	c	s
0	1	0	0	4	è	Λ	¤	4	D	T	d	t
0	1	0	1	5	é	Ω	%	5	E	U	e	u
0	1	1	0	6	ù	Π	&	6	F	V	f	v
0	1	1	1	7	ì	Ψ	'	7	G	W	g	w
1	0	0	0	8	ò	Σ	(	8	H	X	h	x
1	0	0	1	9	Ç	Θ	)	9	I	Y	i	y
1	0	1	0	10 /A	LF	Ξ	*	:	J	Z	j	z
1	0	1	1	11 /B	Ø	[1]	+	;	K	Ä	k	ä
1	1	0	0	12 /C	ø	Æ	,	<	L	Ö	l	ö
1	1	0	1	13 /D	CR	æ	-	=	M	Ñ	m	ñ
1	1	1	0	14 /E	Å	ß	.	>	N	Ü	n	ü
1	1	1	1	15 /F	å	É	/	?	O	§	o	à

[1] This code is an escape to the following extension of the 7 bit default alphabet table.

Extension table of GSM 7 bit default alphabet				b7	0	0	0	0	1	1	1	1
				b6	0	0	1	1	0	0	1	1
				b5	0	1	0	1	0	1	0	1
b4	b3	b2	b1		0	1	2	3	4	5	6	7
0	0	0	0	0					|			
0	0	0	1	1								
0	0	1	0	2								
0	0	1	1	3								
0	1	0	0	4		^						
0	1	0	1	5							[2]	
0	1	1	0	6								
0	1	1	1	7								
1	0	0	0	8			{					
1	0	0	1	9			}					
1	0	1	0	10 /A	[3]							
1	0	1	1	11 /B		[1]						
1	1	0	0	12 /C				[				
1	1	0	1	13 /D				~				
1	1	1	0	14 /E				]				
1	1	1	1	15 /F			\					

www.sendsms.cn

In the event that an MS receives a code where a symbol is not represented in the above table then the MS shall display the character shown in the main default 7 bit alphabet table.

1) This code value is reserved for the extension to another extension table. On receipt of this code, a receiving entity shall display a space until another extension table is defined.
2) This code represents the EURO currency symbol. The code value is that used for the character ‘e’. Therefore a receiving entity which is incapable of displaying the EURO currency symbol will display the character ‘e’ instead.
3) This code is defined as a Page Break character and may be used for example in compressed CBS messages. Any mobile which does not understand the 7 bit default alphabet table extension mechanism will treat this character as Line Feed.

www.sendsms.cn